PLANS

IDALS NO. WINN980921A

NUTRIENT REDUCTION WETLAND

WINNESHIEK COUNTY, IOWA

APRIL 2025

GOVERNING SPECIFICATIONS

THE SPECIFICATIONS AS PREPARED BY IOWA DEPARTMENT OF AGRICULTURE AND LAND STEWARDSHIP AND BOLTON & MENK, INC. SHALL BE CONSIDERED AS PART OF THIS DOCUMENT. NATURAL RESOURCES CONSERVATION SERVICE CONSTRUCTION SPECIFICATIONS SHALL APPLY.

THE CURRENT EDITION OF THE "IOWA STATEWIDE URBAN STANDARD SPECIFICATIONS FOR PUBLIC IMPROVEMENTS" SHALL GOVERN.

IOWA DEPARTMENT OF TRANSPORTATION "STANDARD SPECIFICATIONS FOR HIGHWAY AND BRIDGE CONSTRUCTION" AND ALL CURRENT GENERAL SUPPLEMENTAL SPECIFICATIONS AND MATERIALS INSTRUCTIONAL MEMORANDUM SHALL GOVERN AS REFERENCED.

ALL APPLICABLE FEDERAL, STATE, AND LOCAL LAWS AND ORDINANCES WILL BE COMPLIED WITH IN THE CONSTRUCTION OF THIS PROJECT.

IOWA ONE CALL
1-800-292-8989
www.iowaonecall.com
811

THE SUBSURFACE UTILITY INFORMATION IN THIS PLAN IS UTILITY QUALITY LEVEL D. THIS UTILITY QUALITY LEVEL WAS DETERMINED ACCORDING TO THE GUIDELINES OF CI/ASCE 38-02, ENTITLED "STANDARD GUIDELINES FOR THE COLLECTION AND DEPICTION OF EXISTING SUBSURFACE UTILITY DATA."
THE CONTRACTOR IS RESPONSIBLE FOR CONTACTING IOWA ONE CALL BY PHONE AT 811, OR ON THE WEB AT HTTP://WWW.IOWAONECALL.COM/. TICKET# _____. TICKET NUMBER MUST BE PROVIDED TO THE NRCS PRIOR TO COMMENCEMENT OF WORK.

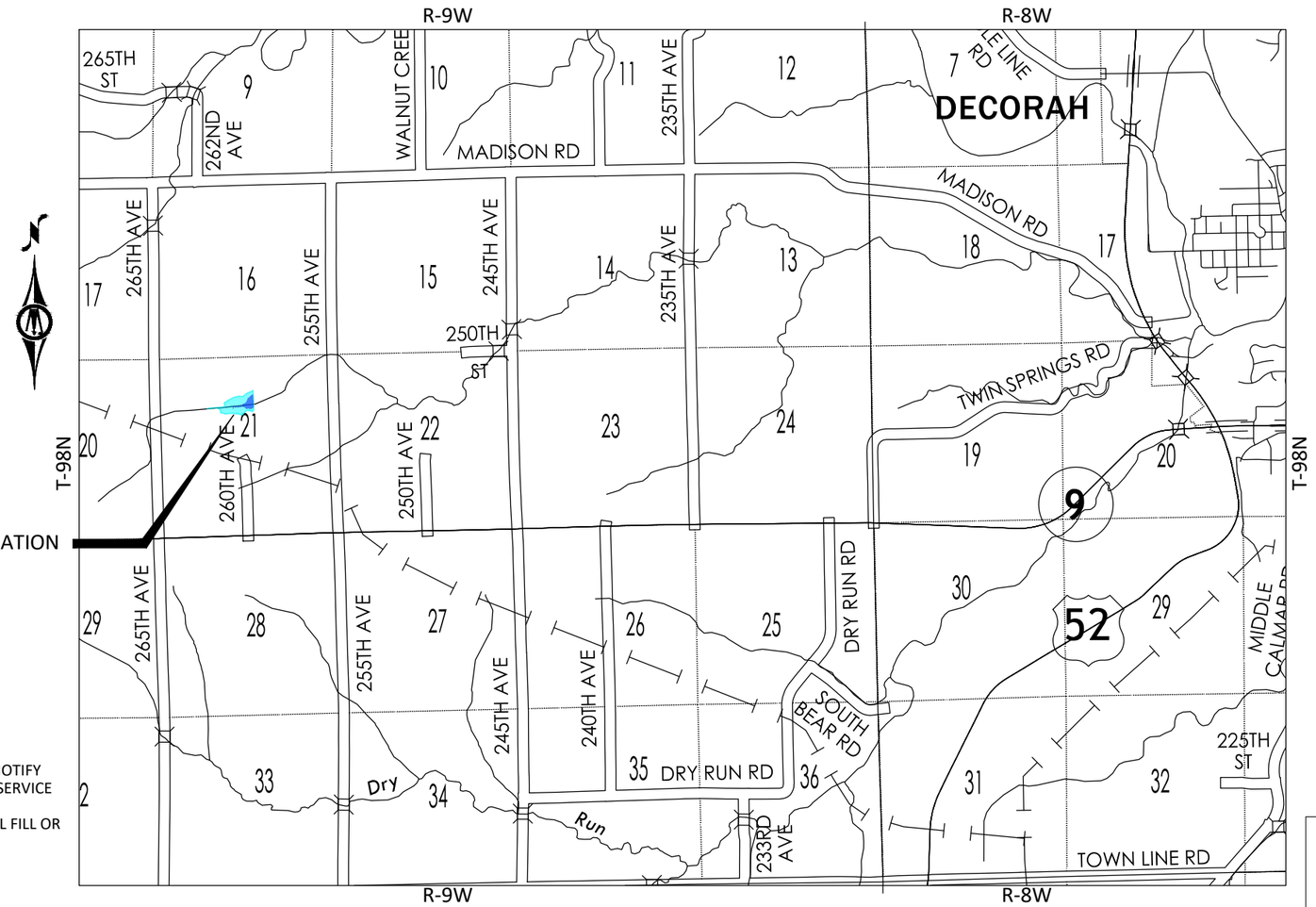

NOTES
1. IF A CULTURAL RESOURCE IS IDENTIFIED DURING CONSTRUCTION, STOP WORK IMMEDIATELY AND NOTIFY THE LOCAL NATURAL RESOURCES CONSERVATION SERVICE OFFICE.
2. THERE IS NO GUARANTEE THAT THE WETLAND WILL FILL OR REMAIN FILLED WITH WATER.

SHEET LIST TABLE

SHEET NUMBER	SHEET TITLE
A.01	TITLE SHEET
A.02	PLAN OVERVIEW SHEET
A.03	REMOVAL PLAN
B.01	CPDT INSTALLATION DETAILS
B.02	OUTLET RISER & ANTI-SEEP COLLAR DETAILS
B.03	WATER CONTROL STRUCTURE DETAIL
B.04	SHEET PILE DETAIL
C.01	ESTIMATE QUANTITIES
D.01	EMBANKMENT PLAN & PROFILE
D.02	EMBANKMENT & SEDIMENT FOREBAY
D.03	AUXILIARY SPILLWAY
D.04	STILLING BASIN DETAIL
D.05	DIVERSION BERM 1
D.06	DIVERSION BERM 2
K.01	SEEDING PLAN
M.01	DRAWDOWN PIPE & SOUTH RELAY 2
M.02	TILE RE-LAYS

CONSERVATION PRACTICE STANDARDS USED:
656 - CONSTRUCTED WETLAND
378 - POND

NRCS JOB CLASS: IV
300 AC < WATERSHED AREA < 1000 AC

TO THE BEST OF MY PROFESSIONAL KNOWLEDGE, JUDGEMENT, AND BELIEF, THESE PLANS MEET APPLICABLE NRCS STANDARDS AND APPLICABLE LAWS AND REGULATIONS.

CLIENT ACCEPTANCE

SIGNATURE DATE

IOWA DEPARTMENT OF AGRICULTURE & LAND STEWARDSHIP

PROJECT DATUM: STATE PLANE
HORIZONTAL: IOWA NORTH
VERTICAL: NAVD 1988

FOR PERMIT REVIEW ONLY
NOT FOR CONSTRUCTION

LICENSED PROFESSIONAL ENGINEER
BRANDON C. SHORT
29449
IOWA

I HEREBY CERTIFY THAT THIS ENGINEERING DOCUMENT WAS PREPARED BY ME OR UNDER MY DIRECT PERSONAL SUPERVISION AND THAT I AM A DULY LICENSED PROFESSIONAL ENGINEER UNDER THE LAWS OF THE STATE OF IOWA.

BRANDON C. SHORT, PE

LICENSE NUMBER: 29449 DATE: _____

MY LICENSE RENEWAL DATE IS 12/31/2026

PAGES OR SHEETS COVERED BY THIS SEAL:

ALL SHEETS

©Bolton & Menk, Inc. 2025, All Rights Reserved
h:\IDALS\0t7134538\CAD\C3D\134538401.dwg 4/18/2025 4:43:48 PM

BOLTON & MENK
1519 BALTIMORE DRIVE
AMES, IA 50010
Phone: (515) 233-6100
Email: Ames@bolton-menk.com
www.bolton-menk.com

DESIGNED	BCS
DRAWN	BCS
CHECKED	JPR
CLIENT PROJ. NO.	0T7.134538

REV	DESCRIPTION	DATE
0	FOR PERMIT REVIEW ONLY	04/02/2025

IOWA DEPARTMENT OF AGRICULTURE AND LAND STEWARDSHIP
IDALS PROJ. NO. WINN980921A
TITLE SHEET

SHEET A.01

DESIGN CRITERIA	VALUE	UNIT	REQUIREMENT
WATERSHED AREA	500	ACRES	
POOL NORMAL WATER LEVEL (NWL) ELEV	1150.00	FT	
DESIGNED WETLAND POOL AREA (@ NWL)	8.6	ACRES	
PERCENT POOL AREA TO WATERSHED AREA	1.7	%	Range 0.5% to 2% of watershed area
MAXIMUM POOL DEPTH	8	FT	
AVERAGE POOL DEPTH	2.0	FT	
DEEP WATER AREA (DEPTH > 3 FT)	2.0	ACRES	
PERCENT DEEP WATER TO POOL AREA	22.8	%	Less than 25%
POOL STORAGE VOLUME AT NWL	17.4	ACRE-FT	
TOP OF BERM ELEVATION	1154.50	FT	
POOL STORAGE VOLUME AT TOP OF BERM	75.7	ACRE-FT	
PRIMARY WEIR ELEVATION	1150.00	FT	
PRIMARY WEIR WIDTH	54	FT	
TOTAL EASEMENT AREA	23.5	ACRES	
AREA OF BUFFER	14.9	ACRES	
RATIO BUFFER AREA TO NWL POOL AREA	1.7		Less than 4
25-YEAR STORM HWL IN POOL	1152.53	FT	
25-YEAR PEAK INFLOW	1060	CFS	
25-YEAR PEAK OUTFLOW	733.00	CFS	
100-YEAR STORM HWL IN POOL	1153.42	FT	
100-YEAR PEAK INFLOW	1662	CFS	
100-YEAR PEAK OUTFLOW	1234	CFS	

WETLAND POOL DEPTH (FT)	ELEV (FT)	INCREMENTAL AREA (FT^2)	CUMULATIVE VOLUME (FT^3)	CUMULATIVE VOLUME (AC-FT)
0.0	1142.0	40		
2.0	1144.0	2,940	2,980	0.07
4.0	1146.0	38,000	43,920	1.01
5.0	1147.0	85,600	105,720	2.43
6.0	1148.0	139,000	218,020	5.01
7.0	1149.0	284,300	429,670	9.86
8.0	1150.0	374,900	759,270	17.43
9.0	1151.0	453,600	1,173,520	26.94
10.0	1152.0	541,600	1,671,120	38.36
11.0	1153.0	628,600	2,256,220	51.80
12.0	1154.0	715,800	2,928,420	67.23
12.5	1154.5	756,600	3,296,520	75.68

BENCHMARKS

POINT NO.	NORTHING (SFT)	EASTING (SFT)	ELEVATION (SFT)	DESCRIPTION
5207	3937588.143	5341052.438	1182.494	REBAR MARKER WITH ALUMINUM CAP 15525
5208	3937641.427	5341062.649	1181.138	REBAR MARKER - BENT
5209	3937587.820	5341007.266	1179.407	CONCRETE MONUMENT
5213	3937659.128	5343694.513	1196.297	REBAR MARKER
5214	3937523.738	5343698.267	1194.363	REBAR MARKER
5221	3938944.296	5342337.461	1167.369	REBAR MARKER WITH ALUMINUM CAP 19211
5222	3937519.000	5342991.243	1183.441	REBAR WITH CAP 11442 - BENT
5223	3937623.699	5342373.307	1194.954	REBAR MARKER WITH ALUMINUM CAP 19211
5228	3937511.082	5341602.147	1204.402	REBAR WITH CAP 19211
5229	3937602.970	5341599.093	1205.463	REBAR WITH CAP 19211
5230	3938174.935	5341580.280	1180.370	IRON PIPE
5231	3938905.254	5341015.420	1175.010	REBAR MARKER
5232	3938159.784	5341036.407	1172.549	REBAR MARKER

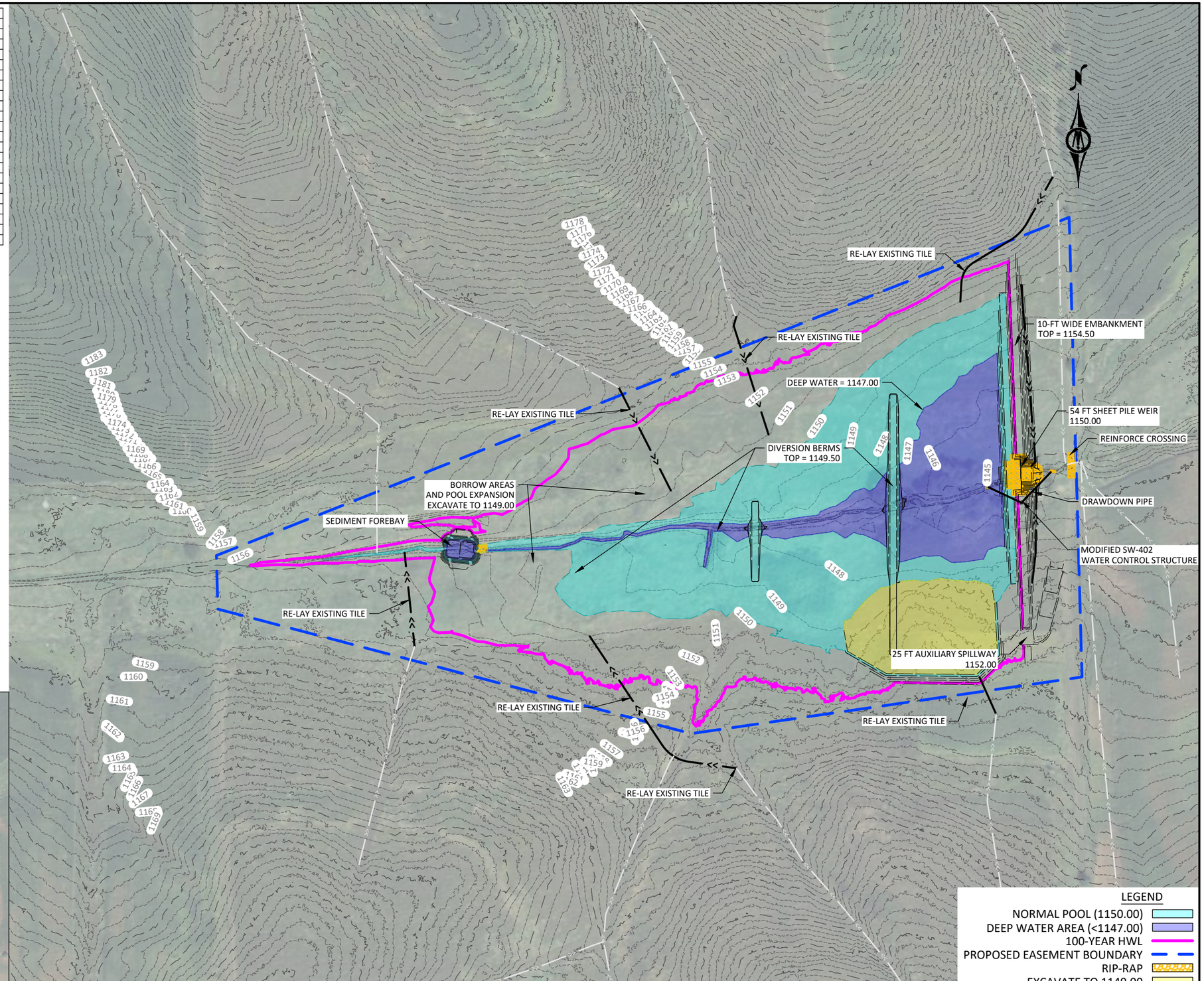

CONSTRUCTION ACCESS & BENCHMARK LOCATIONS

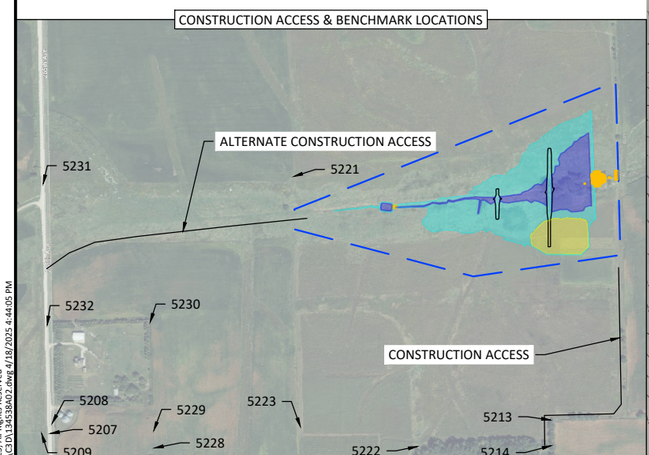

HORZ. 0 100 200 SCALE FEET

©Bolton & Menk, Inc. 2025, All Rights Reserved
h:\IDALS\07134538\CAD\C3D\134538A02.dwg 4/18/2025 4:44:05 PM

BOLTON & MENK

1519 BALTIMORE DRIVE
AMES, IA 50010
Phone: (515) 233-6100
Email: Ames@bolton-menk.com
www.bolton-menk.com

DESIGNED BCS	REV	DESCRIPTION	DATE
DRAWN BCS	0	FOR PERMIT REVIEW ONLY	04/02/2025
CHECKED JPR			
CLIENT PROJ. NO. 07.134538			

IOWA DEPARTMENT OF AGRICULTURE AND LAND STEWARDSHIP

IDALS PROJ. NO. WINN980921A

PLAN OVERVIEW SHEET

SHEET A.02

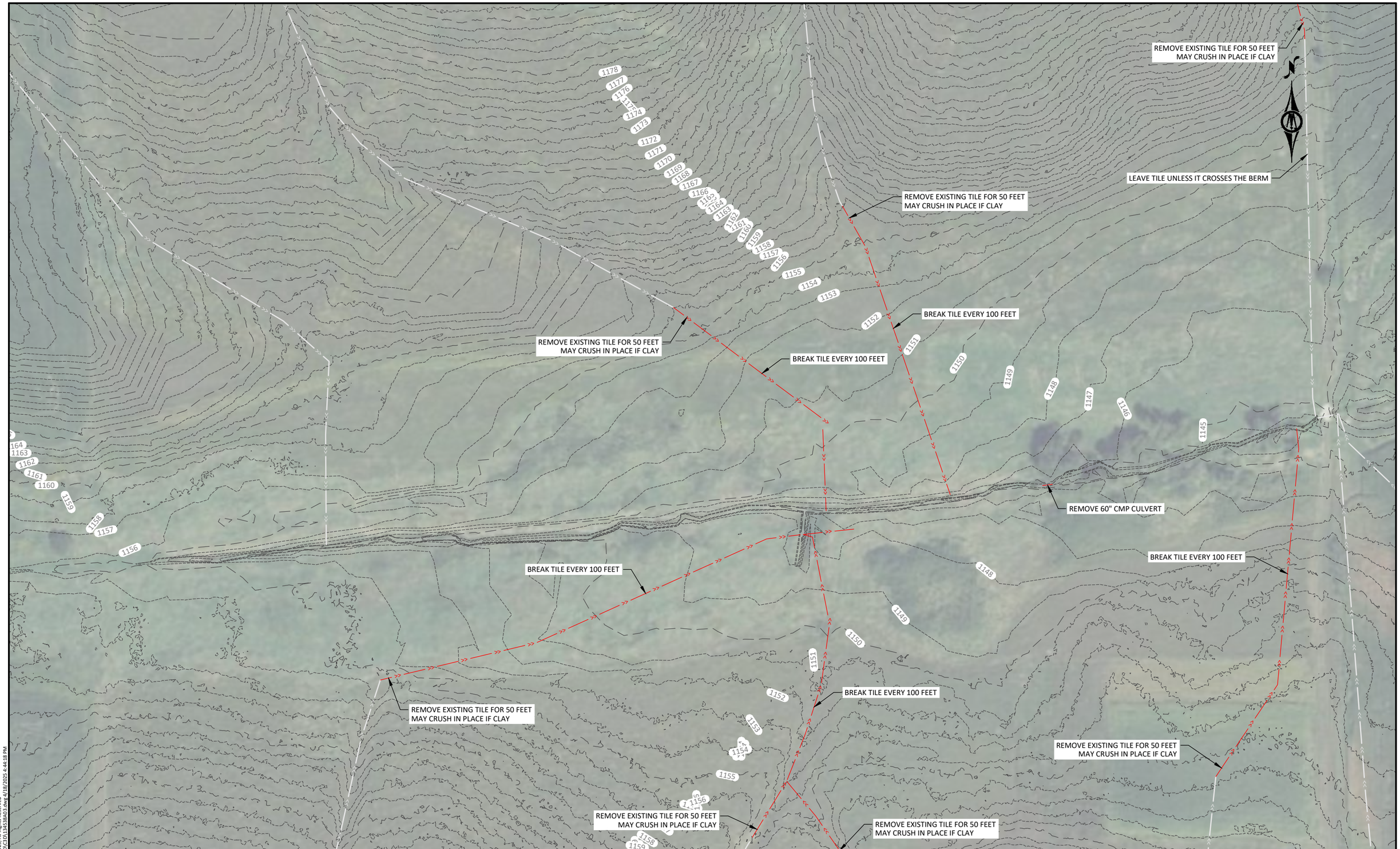

HORZ. 0 100 200
SCALE FEET

BOLTON & MENK

1519 BALTIMORE DRIVE
AMES, IA 50010
Phone: (515) 233-6100
Email: Ames@bolton-menk.com
www.bolton-menk.com

DESIGNED	BCS
DRAWN	BCS
CHECKED	JPR
CLIENT PROJ. NO.	017.134538

REV	DESCRIPTION	DATE
0	FOR PERMIT REVIEW ONLY	04/02/2025

IOWA DEPARTMENT OF AGRICULTURE AND LAND STEWARDSHIP

IDALS PROJ. NO. WINN980921A

REMOVAL PLAN

SHEET A.03

©Bolton & Menk Inc. 2025, All Rights Reserved
h:\IDALS\017134538\CAD\C3D\134538A03.dwg 4/18/2025 4:44:18 PM

CORRUGATED POLYETHYLENE DRAINAGE TUBING MATERIAL & INSTALLATION NOTES

1. ALL CPDT AND CONNECTORS FURNISHED SHALL BE IN COMPLIANCE WITH MATERIAL STANDARDS ASTM F405 AND F667, AS APPLICABLE, AND SHALL BE CLASSIFIED AS HEAVY-DUTY UNDER THOSE STANDARDS.
2. EXCEPT MODIFIED HEREIN OR OTHERWISE APPROVED BY ENGINEER, ALL CPDT SHALL BE INSTALLED IN COMPLIANCE WITH THE ASTM 449 STANDARD PRACTICE.
3. FOR PIPES 6" DIAMETER AND SMALLER A 90° V GROOVE BOTTOM MAY BE USED, FOR ALL LARGER PIPE A TRAPEZOIDAL BOTTOM OR A CIRCULAR BOTTOM CONFORMING TO THE OUTSIDE DIAMETER OF THE PIPE SHALL BE USED. PRIOR TO THE INSTALLATION OF CPDT, CONTRACTOR MUST PROVE TO ENGINEER THAT THE INSTALLATION REQUIREMENTS, INCLUDING THE SHAPE OF THE TRENCH BOTTOM, WILL BE ACCOMPLISHED.
4. WHERE TRENCH BOTTOM IS IN FIRM UNDISTURBED SOIL, SHAPE TRENCH BASE GROOVE. WHERE EXCESS CUT OCCURS, OVEREXCAVATE AND PLACE MINIMUM THREE (3) INCH THICK, GRAVELLY SAND BEDDING TO RESTORE GRADE. THIS BEDDING SHALL MEET THAT REQUIRED FOR TRENCH INSTALLATION TYPE 3 ON PLAN SHEET C.02. IF DUE TO CONTRACTOR ERROR THIS MATERIAL AND WORK IS SUBSIDIARY TO THE INSTALLATION OF THE PIPE. CONTRACTOR MAY SUBSTITUTE PIPE BEDDING ROCK AS THE BEDDING MATERIAL.
5. NATIVE SOILS MAY BE USED AS BACKFILL MATERIAL UNLESS UNSTABLE TRENCH CONDITIONS PREVENT THE TRENCH BOTTOM HOLDING THE SHAPED GROOVE. IF TRENCH BOTTOM WILL NOT HOLD GROOVE SHAPE CONTRACTOR SHALL NOTIFY ENGINEER IMMEDIATELY. A FLAT BOTTOM TRENCH INSTALLATION WILL THEN BE ASSUMED. THE REQUIRED BEDDING MATERIAL WILL BE PAID UNDER THE TILE TRENCH STABILIZATION AND CRADLING ROCK BID ITEM.
6. MINIMUM TRENCH WIDTH IS PIPE OUTSIDE DIAMETER PLUS FOUR (4) INCHES FOR PLOWED INSTALLATION AND PIPE OUTSIDE DIAMETER PLUS TWELVE (12) INCHES FOR OPEN TRENCH INSTALLATION.
7. ALL LATERAL CONNECTIONS, ELBOWS, TEES, ALIGNMENT CURVES, START HOLES AND ALL PORTIONS OF THE TRENCH NOT MEETING THE GROOVED TRENCH INSTALLATION REQUIREMENTS SHALL BE FILLED TO A MINIMUM OF SIX (6) INCH COVER OVER THE PIPE WITH GRADED CRUSHED STONE OR GRAVEL AS SHOWN ON TABLE 2 OF THIS SHEET. UNLESS DUE TO CONTRACTOR ERROR THIS BEDDING MATERIAL WILL BE PAID UNDER THE TILE TRENCH STABILIZATION AND CRADLING ROCK BID ITEM.
8. MANUFACTURER'S ENDCAPS SHALL BE INSTALLED AT THE TERMINATION OF EACH LINE UNLESS A CONNECTION TO AN EXISTING DRAIN IS MADE.
9. WITH THE INSTALLATION OF THE FIRST REACH OF CPDT ON THE PROJECT, CONTRACTOR IS REQUIRED TO WORK WITH THE ENGINEER TO CHECK AND CONFIRM THAT THE PIPE STRETCH, IF ANY, DOES NOT EXCEED 5%.
10. ALIGNMENT TURNS MAYBE MADE USING EITHER A MANUFACTURED FITTING OR CURVING THE LINE WITH A 25' MINIMUM RADIUS.

Table 1
Maximum Allowable Buried Depth to Flowline of CPDT

Nominal Pipe Diameter (IN)	Pipe Quality (ASTM)	Trench Width at Top of the Pipe (FT)			
		12"	18"	24"	30" or Greater
4	Standard	13	7	5.5	5
	Heavy-duty	Any	10	7	6
6	Standard	10	7	5.5	5
	Heavy-duty	Any	9.5	6.5	6
8	Standard	10	7	5.5	5
	Heavy-duty	Any	10	7	6
10	Heavy-duty	...	9	7	6
12	Heavy-duty	...	9	7	6
15	Heavy-duty	...	...	7	6

Table 2
Acceptable Bedding Material and Compaction Requirements

Description	Percentage Passing Sieve Sizes			Minimum Standard Density (%)	Maximum Compaction Layer Height (IN.)
	1"	3/4"	No. 4		
Crushed Stone Crushed Gravel*	100%	> 95%	< 5%	Dumped	18

* Class 1 Bedding Material Per SUDAS 3010.202A is an Allowable Substitute

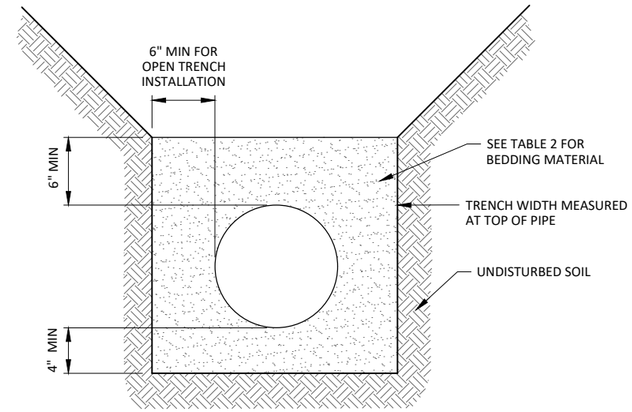

FILL TRENCH TO 6" ABOVE TOP OF PIPE WITH CRUSHED STONE OR GRAVEL MEETING THE REQUIREMENTS IN TABLE 2. BEDDING MATERIAL SHALL BE INCIDENTAL TO THE PIPE INSTALLATION.

FLAT BOTTOM TRENCH INSTALLATION

NOT TO SCALE
SOURCE: ASTM F449

NOTE: THIS IS AN ALLOWED ALTERNATIVE INSTALLATION FOR CPDT

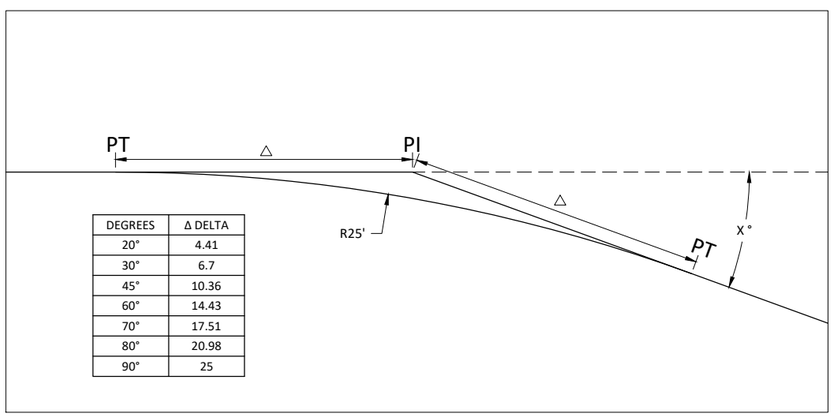

DEGREES	Δ DELTA
20°	4.41
30°	6.7
45°	10.36
60°	14.43
70°	17.51
80°	20.98
90°	25

THE CIRCULAR GROOVE SHALL BE A MINIMUM 0.35R DEEP AND SHALL MATCH THE OUTSIDE CURVE SHAPE OF THE DEFLECTED CPDT.

THE TRAPEZOIDAL GROOVE SHALL BE SHAPED AND ADJUSTED SUCH THAT POINTS A, B, & C WILL TOUCH THE UNDEFLECTED CPDT FOR EACH SIZE INSTALLED.

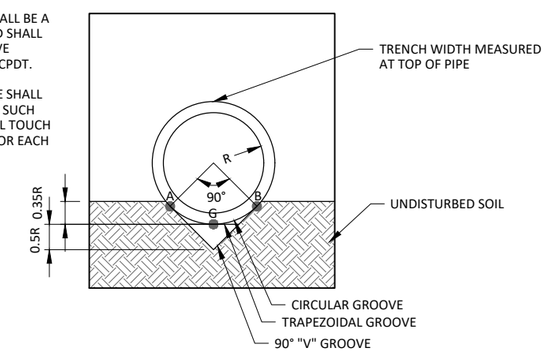

PREFFERED TRENCH INSTALLATION BOTTOM

TRAPEZOIDAL GROOVE, "V" GROOVE, & CIRCULAR GROOVE
NOT TO SCALE
SOURCE: ASTM F449

©Bolton & Menk, Inc. 2025, All Rights Reserved
h:\IDALS\0t7134538\CAD\C3D\134538B04.dwg 4/18/2025 4:44:21 PM

BOLTON & MENK
1519 BALTIMORE DRIVE
AMES, IA 50010
Phone: (515) 233-6100
Email: Ames@bolton-menk.com
www.bolton-menk.com

DESIGNED BCS
DRAWN BCS
CHECKED JPR
CLIENT PROJ. NO. 0T7.134538

REV	DESCRIPTION	DATE
0	FOR PERMIT REVIEW ONLY	04/02/2025

IOWA DEPARTMENT OF AGRICULTURE AND LAND STEWARDSHIP
IDALS PROJ. NO. WINN980921A
CPDT INSTALLATION DETAILS

SHEET B.01

OUTLET RISER DETAIL

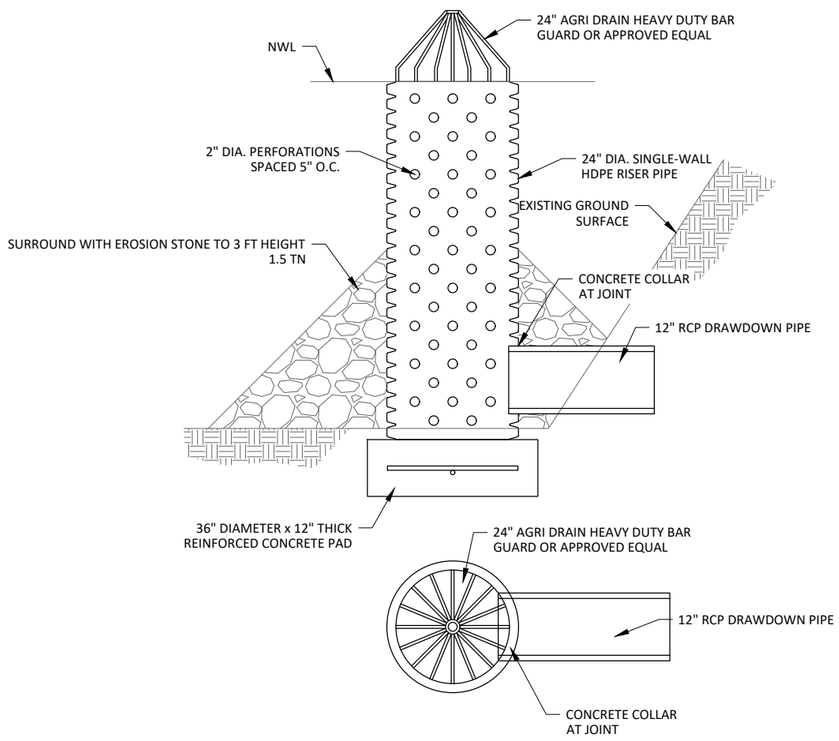

ANTI-SEEP COLLAR DETAILS

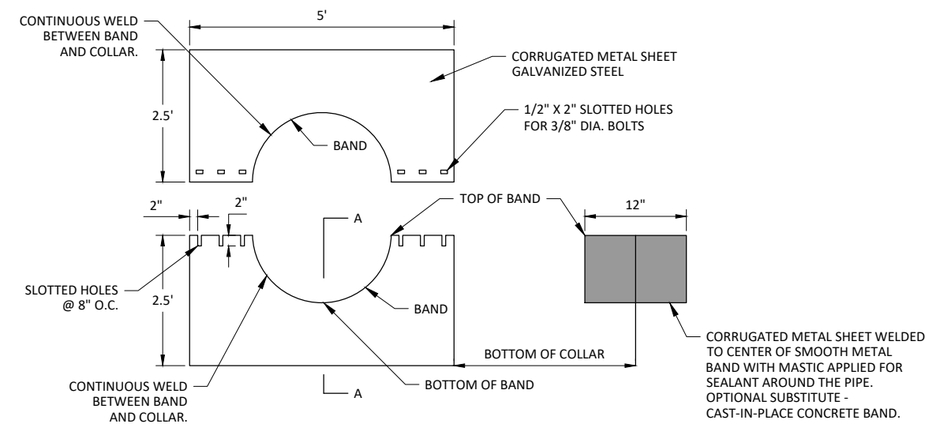

ALTERNATIVE 1: RCP ANTI-SEEP COLLAR

NOT TO SCALE

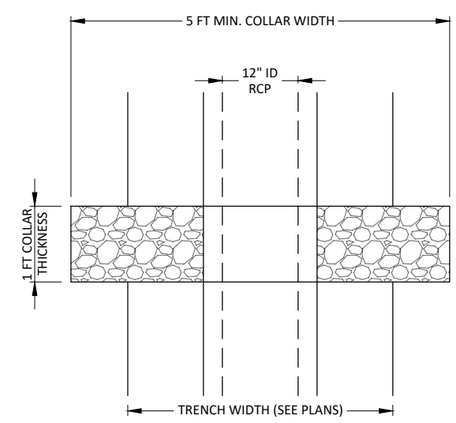

NOTES:

1. COMPOSITE BENTONITE AGGREGATE (CBA) SHALL BE AQUABLOK OR APPROVED EQUAL.
2. COLLAR SHALL EXTEND 1.75 FT BELOW BOTTOM OF PIPE AND 1.75 FT ABOVE TOP OF PIPE
3. COLLAR SHALL BE A MINIMUM OF 5 FT WIDE AND EXTEND A MINIMUM OF 6" BEYOND EDGE OF TRENCH
4. NO COMPACTION OF CBA IS REQUIRED.
5. EXCAVATE AND BACKFILL THE REMAINDER OF THE TRENCH AS NOTED IN THE PLANS.

ALTERNATIVE 2: COMPOSITE BENTONITE AGGREGATE COLLAR

NOT TO SCALE

©Bolton & Menk, Inc. 2025, All Rights Reserved
h:\IDALS\0T7134538\CAD\C3D\134538B04.dwg 4/18/2025 4:44:23 PM

BOLTON & MENK
1519 BALTIMORE DRIVE
AMES, IA 50010
Phone: (515) 233-6100
Email: Ames@bolton-menk.com
www.bolton-menk.com

DESIGNED	REV	DESCRIPTION	DATE
BCS	0	FOR PERMIT REVIEW ONLY	04/02/2025
DRAWN BCS			
CHECKED JPR			
CLIENT PROJ. NO. 0T7.134538			

IOWA DEPARTMENT OF AGRICULTURE AND LAND STEWARDSHIP

IDALS PROJ. NO. WINN980921A

OUTLET RISER & ANTI-SEEP COLLAR DETAILS

SHEET B.02

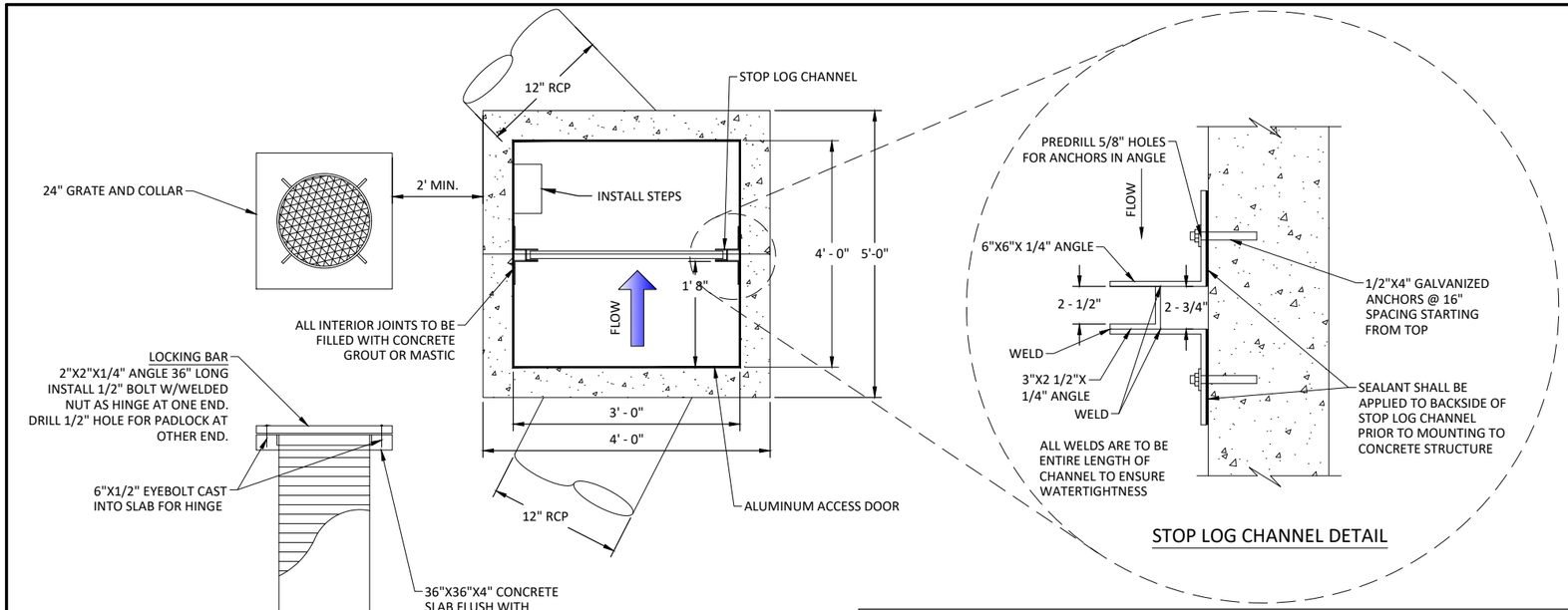

STOP LOG CHANNEL DETAIL

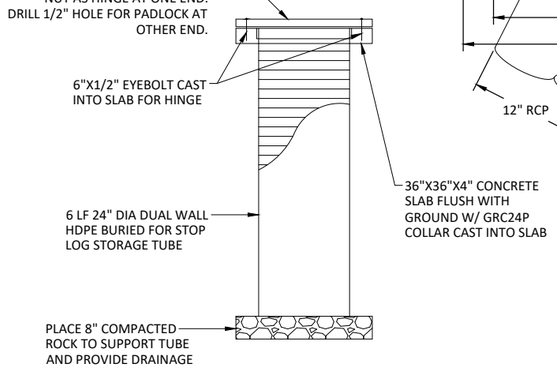

COVER AND STOP LOG STORAGE DETAIL

NOT TO SCALE

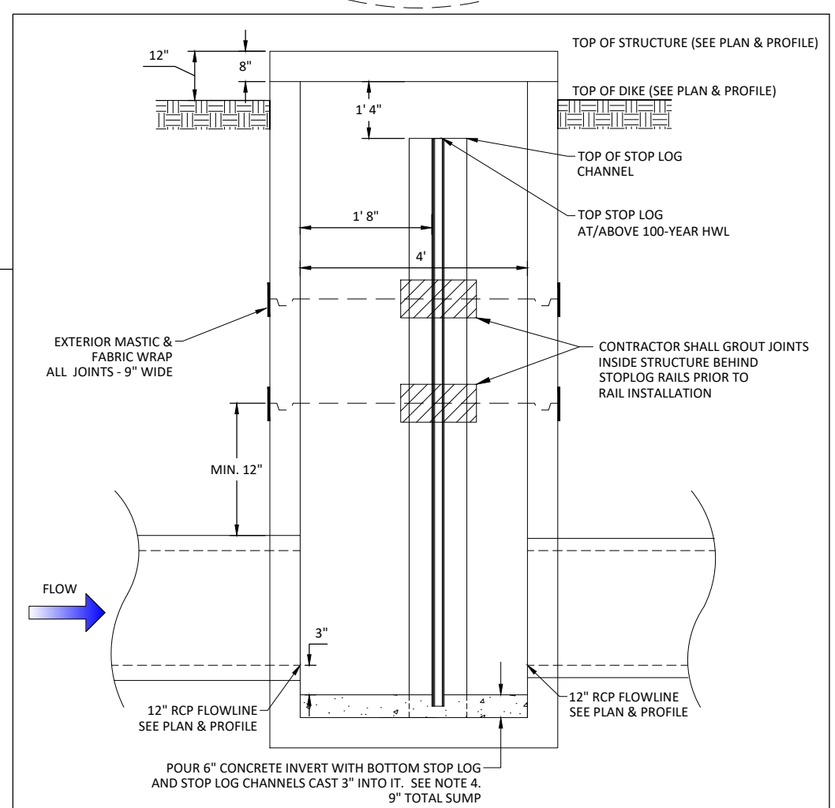

SW-402 WATER CONTROL OUTLET STRUCTURE SECTION

NOT TO SCALE

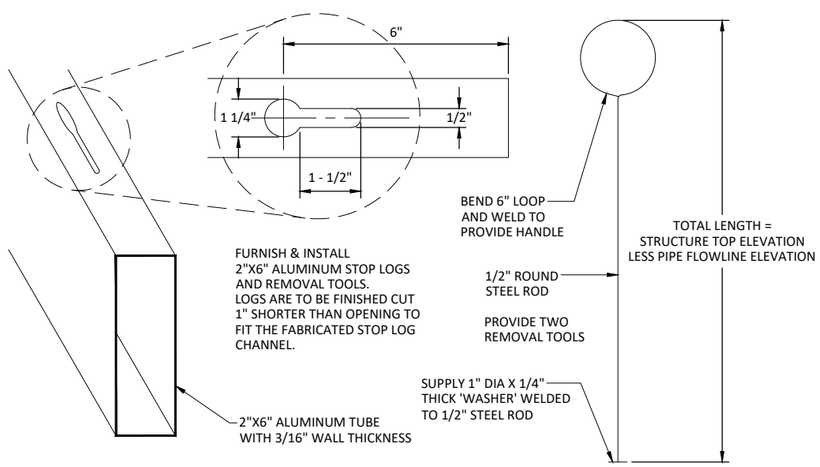

STOP LOG & REMOVAL TOOL DETAIL

NOT TO SCALE

COVER/STOP LOG STORAGE NOTES:

1. PROVIDE HALLIDAY PRODUCTS MODEL S1R3648 (OR APPROVED EQUAL) 36" x 48" ALUMINUM ACCESS DOOR WITH LOCKING MECHANISM AND LIFTING HANDLE.
2. TOP OF STRUCTURE SHALL BE AN 8" THICK REINFORCED PRECAST TOP WITH ALUMINUM ACCESS DOOR CAST INTO TOP.
3. PROVIDE 24" GRATE AND COLLAR (AGRI DRAIN GR24 GRATE AND GRC24 COLLAR OR APPROVED EQUAL) FOR STOP LOG STORAGE.
4. PADLOCKS FOR ACCESS DOOR AND STOP LOG STORAGE TUBE SHALL BE KEYED ALIKE. FOUR KEYS ARE TO BE SUPPLIED UPON PROJECT COMPLETION.

STOP LOG CHANNEL NOTES:

1. ALL STEEL SHALL BE FY=36 KSI.
2. ANCHORS SHALL BE GALVANIZED STEEL FURNISHED W/NUTS, WASHERS AND LOCK WASHERS.
3. STOP LOG CHANNEL SHALL BE FURNISHED AS ONE CONTINUOUS PIECE W/CONTINUOUS WELDS.
4. ALL STEEL STOP LOG CHANNEL COMPONENTS ARE TO BE GALVANIZED AFTER WELDING AND DRILLING IS COMPLETE.
5. CONTRACTOR IS TO APPLY SEALANT VERY GENEROUSLY TO BACKSIDE OF STOP LOG CHANNEL TO ENSURE WATERTIGHT SEAL. SEALANT SHALL BE SIKA 30 YEAR INDUSTRIAL CAULK IN LIMESTONE GREY OR APPROVED EQUIVALENT.

WATER CONTROL STRUCTURE NOTES:

1. STRUCTURE FABRICATION AND INSTALLATION SHALL CONFORM TO SUDAS 6010.302 SW-402 RECTANGULAR STORM SEWER MANHOLE
2. STRUCTURE SHOP DRAWINGS ARE REQUIRED FOR ENGINEER'S REVIEW AND APPROVAL BEFORE FABRICATION OF WATER CONTROL STRUCTURE.
3. PRECAST WATER CONTROL STRUCTURE SHALL BE SUPPLED IN 2 OR 3 SECTIONS, PLUS AN 8" THICK COVER SECTION. SECTION SIZE IS LEFT TO CONTRACTOR'S DISCRETION EXCEPT BOTTOM SECTION SHALL INCLUDE BASE AND WALLS TO 12" ABOVE INLET HOLE.
4. A CONCRETE INVERT IS TO BE INSTALLED AFTER STOP LOG CHANNEL IS INSTALLED. THE BOTTOM STOP LOG IS TO BE CAST INTO THE INVERT WITH THREE HALF INCH DIA. "J BOLTS" FASTENED TO THE BOTTOM STOP LOG. NO LIFTING HOLES ARE REQUIRED FOR THIS BOTTOM LOG.
5. ALL SECTIONS OF THE STRUCTURE ARE TO HAVE "TONGUE AND GROOVE" JOINTS SEALED WITH O RING GASKETS IN THE JOINT AND MASTIC AND FABRIC WRAP ON THE STRUCTURE EXTERIOR.
6. INTERIOR JOINTS SHALL BE FILLED AND SEALED TO PREVENT WATER FLOW IN JOINT BEHIND STOP LOG CHANNEL USING EITHER CONCRETE GROUT OR MASTIC.
7. A-LOK (OR EQUIVALENT) WATERTIGHT SEALS ARE REQUIRED FOR PIPE CONNECTIONS TO THE DRAWDOWN CONTROL STRUCTURE.
8. MANHOLE STEPS ARE TO BE INSTALLED FOR MAINTENANCE ACCESS TO THE STOP LOGS. STEPS ARE TO BE PER SUDAS SECTION 6010-2-2.13.
9. ENSURE THAT ALL JOINTS ARE WATER-TIGHT AND PROPERLY SEALED

©Bolton & Menk, Inc. 2025, All Rights Reserved
h:\IDALS\0713453\8\CAD\C3D\134538803.dwg 4/18/2025 4:44:30 PM

BOLTON & MENK
1519 BALTIMORE DRIVE
AMES, IA 50010
Phone: (515) 233-6100
Email: Ames@bolton-menk.com
www.bolton-menk.com

DESIGNED	BCS
DRAWN	BCS
CHECKED	JPR
CLIENT PROJ. NO.	017.134538

REV	DESCRIPTION	DATE
0	FOR PERMIT REVIEW ONLY	04/02/2025

IOWA DEPARTMENT OF AGRICULTURE AND LAND STEWARDSHIP

IDALS PROJ. NO. WINN980921A

WATER CONTROL STRUCTURE DETAIL

SHEET B.03

DESIGN SHEET PILING AREA

SHEET PILING REQUIREMENTS

MINIMUM SECTION MODULUS OF 13.5 CUBIC INCHES PER FOOT OF WALL.
MINIMUM GRADE OF STEEL IS 36 KSI.
MINIMUM MOMENT OF INERTIA OF 70 INCHES ^ 4 PER FOOT OF WALL.
ALL SHEETING SHALL MEET ASTM A-328, A-572 GR50 OR A-690.

APPROVED PRODUCTS

SKYLINE STEEL NZ 14
SHORELINE STEEL SZ-14.5, SZ-18
CONTECH xx
JD FIELDS PZC12
GERDAU AMERISTEEL PZC13, PZC12

OTHER SHEETING MAYBE ALLOWED WITH PRIOR APPROVAL OF ENGINEER. ALL MATERIALS ARE BASED ON MINIMUM COVERAGE AND FURTHER SIZING WILL NEED TO BE DONE.

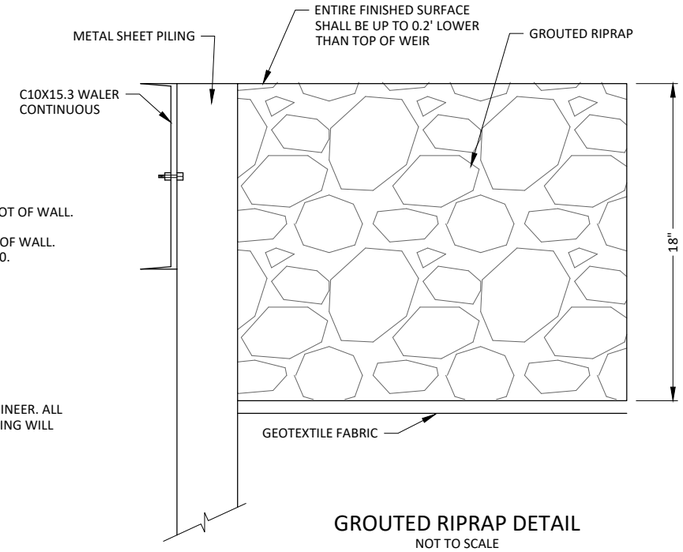

GROUTED RIPRAP DETAIL
NOT TO SCALE

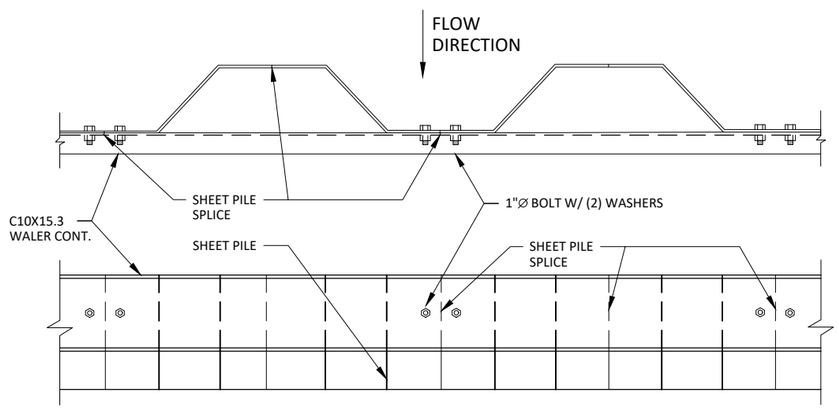

WALER BOLT PLACEMENT
NOT TO SCALE

NOTES:

1. ALL BOLTS WILL BE 1" DIA. WITH 2 WASHERS. BOLT SHALL BE EXTENDED AT A MINIMUM OF $\frac{3}{8}$" BEYOND THE NUT.
2. ALL HOLES SHALL BE DRILLED $\frac{1}{16}$" LARGER IN DIAMETER THAN THE BOLT.
3. THE WALER SHALL BE PLACED ON THE DOWNSTREAM SIDE OF THE WEIR.
4. ANY HOLES LEFT IN SHEET PILE (LIFTING HOLES ETC.) SHALL BE WELDED CLOSED.
5. AFTER SHEETING AND WALER INSTALLATION ALL SHEETING ON THE WEIR IS TO BE CUT TO CONFORM WITH 3:1 SLOPE AND THE DESIGN ELEVATIONS.
6. STRUCTURAL STEEL SHALL BE FABRICATED AND ERECTED IN ACCORDING WITH THE LATEST SPECIFICATION OF AISC. FABRICATOR SHALL SUBMIT SHOP DRAWINGS SHOWING THAT PLANNED STEEL WILL COMPLETELY COVER INTENDED WALL AREA. FABRICATE AFTER ENGINEERS REVIEW.
7. DEFLECTIONS SHALL BE MADE IN FABRICATED PIECES AND STILL CONFORM TO THE DIMENSIONS GIVEN.
8. IT IS THE CONTRACTOR'S RESPONSIBILITY TO DETERMINE ALLOWABLE CONSTRUCTION LIVE LOADS.
9. PROVIDE ALL NECESSARY TEMPORARY BRACING, SHORING, GUYING OR OTHER MEANS TO AVOID EXCESSIVE STRESSES AND TO HOLD STRUCTURAL ELEMENTS IN PLACE DURING CONSTRUCTION.

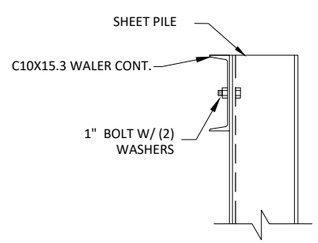

NOTE: 1 BOLT TO BE PLACED ON EACH SIDE OF SPLICE

BOLT DETAIL
NOT TO SCALE

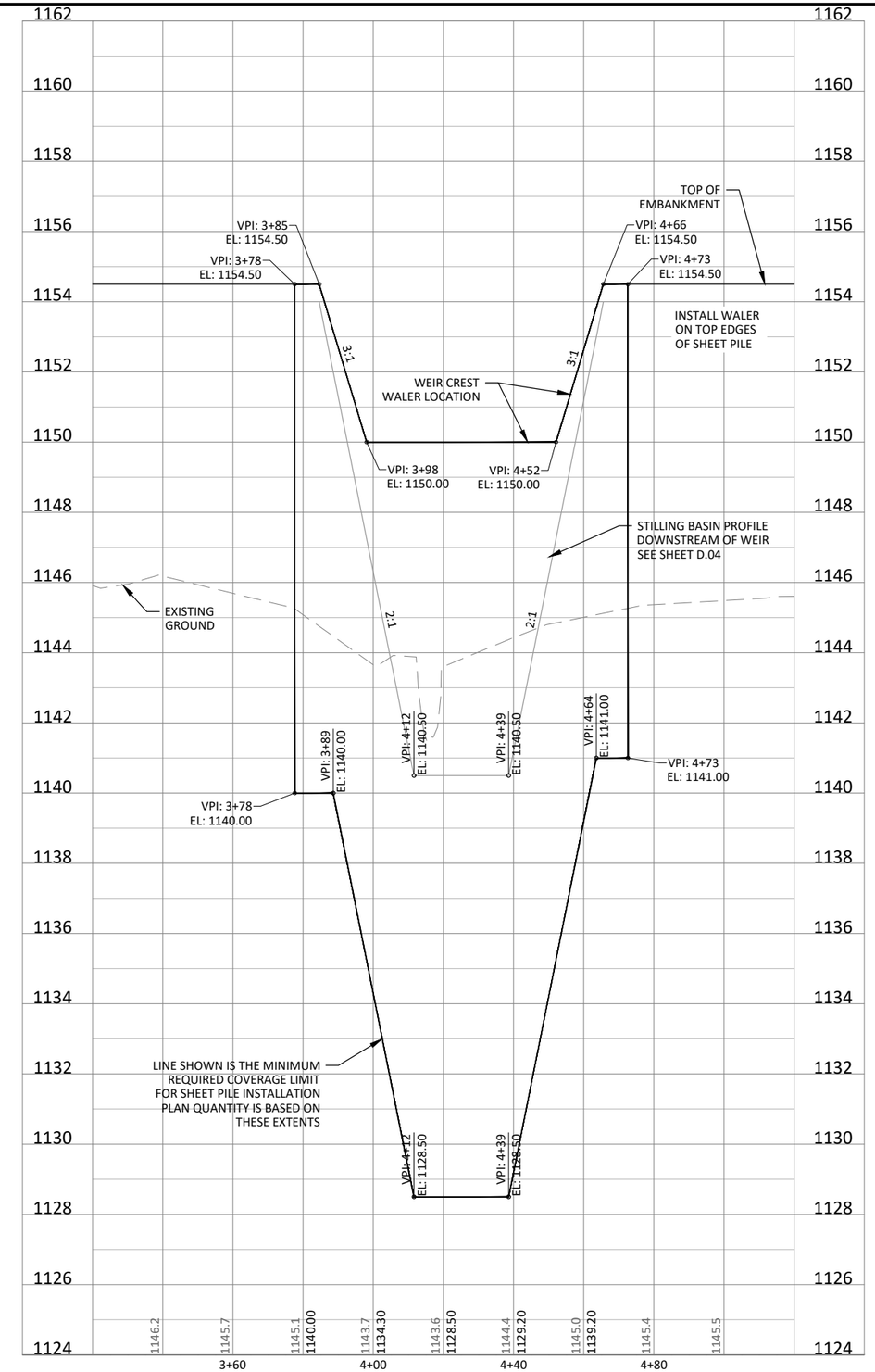

HORZ. 0 20 40 SCALE FEET
VERT. 0 2 4 SCALE FEET

BOLTON & MENK
1519 BALTIMORE DRIVE
AMES, IA 50010
Phone: (515) 233-6100
Email: Ames@bolton-menk.com
www.bolton-menk.com

DESIGNED BCS	REV	DESCRIPTION	DATE
DRAWN BCS	0	FOR PERMIT REVIEW ONLY	04/02/2025
CHECKED JPR			
CLIENT PROJ. NO. OT7.134538			

IOWA DEPARTMENT OF AGRICULTURE AND LAND STEWARDSHIP
IDALS PROJ. NO. WINN980921A
SHEET PILE DETAIL

SHEET B.04

©Bolton & Menk, Inc. 2025, All Rights Reserved
h:\IDALS\OT7134538\CAD\C3D\134538B01.dwg 4/18/2025 4:44:48 PM

Bid Item	Sub-Item	Description	Spec No	Plan No.	Estimated Quantities	
					Quantity	Unit
1	-	Site Stripping & Preparation	IA CS-001		1	LS
2	-	Crop Damage	IA CS-001		0	AC
3	-	Structure & Channel Seeding	IA CS-006	K.01	1.4	AC
4	-	Buffer Seeding	IA CS-006	K.01	0.4	AC
5	-	Mobilization and Demobilization	IA CS-008		1	LS
6	-	Drain Tile Investigation and Removal	IA CS-009	A.03	8	HR
7	-	Steel Sheet Piling	IA CS-013	B.03	1640	SF
8	-	Excavation (General)	IA CS-021	A.02	706	CY
9	-	Earthfill (General)	IA CS-023	D.05-D.06	713	CY
10	-	Earthfill (General Dam)	IA CS-023	D.01-D.02	5473	CY
11	-	Earthfill (Dam Core)	IA CS-023	D.01-D.02	1874	CY
12	-	Drainfill, Fine	IA CS-024	D.01-D.02	55	CY
13	-	Topsoil Stripping, Stockpiling, and Placement	IA CS-026	A.02	4260	CY
14	-	Corrugated Single-Wall HDPE Pipe				
	A.	6" Diameter (Perforated)	IA CS-046	D.01-D.02	543	LF
	B.	8" Diameter (Non-Perforated)	IA CS-046	M.02	883	LF
	C.	12" Diameter (Non-Perforated)	IA CS-046	M.02	128	LF
	D.	15" Diameter (Non-Perforated)	IA CS-046	M.02	292	LF
15	-	Reinforced Concrete Pipe				
	A.	12" Diameter	IA CS-031	M.01	96	LF
	B.	12" Diameter (Gasketed)	IA CS-031	M.01	72	LF
16	-	Anti-Seep Collars	IA CS-051	M.01	3	EA
17	-	Modified SW-402 Water Control Structure	IA CS-031	M.01, B.02	1	EA
18	-	Stoplog Storage Structure	IA CS-031	B.02	1	EA
19	-	Reinforced Concrete Apron (12")	IA CS-031	M.01	1	EA
20	-	Outlet Riser Structure	IA CS-031	B.02, M.01	1	EA
21	-	CMP Tile Outlets (20 LF Each):				
	A.	10" Diameter	IA CS-051	M.02	4	EA
	B.	15" Diameter	IA CS-051	M.02	1	EA
	C.	18" Diameter	IA CS-051	M.02	1	EA
22	-	Rip Rap (Class E)	IA CS-061	D.04, A.02, M.01	428	TN
23	-	Erosion Stone	IA CS-061	B.02, D.04	28.5	TN
24	-	Grout for Rip Rap	IA CS-062	D.04	78	CY

©Bolton & Menk, Inc. 2025, All Rights Reserved
h:\IDALS\0t7134538\CAD\C3D\134538C01.dwg 4/18/2025 4:44:53 PM

BOLTON & MENK
1519 BALTIMORE DRIVE
AMES, IA 50010
Phone: (515) 233-6100
Email: Ames@bolton-menk.com
www.bolton-menk.com

DESIGNED BCS
DRAWN BCS
CHECKED JPR
CLIENT PROJ. NO. 0T7.134538

REV	DESCRIPTION	DATE
0	FOR PERMIT REVIEW ONLY	04/02/2025

IOWA DEPARTMENT OF AGRICULTURE AND LAND STEWARDSHIP
IDALS PROJ. NO. WINN980921A
ESTIMATE QUANTITIES

SHEET C.01

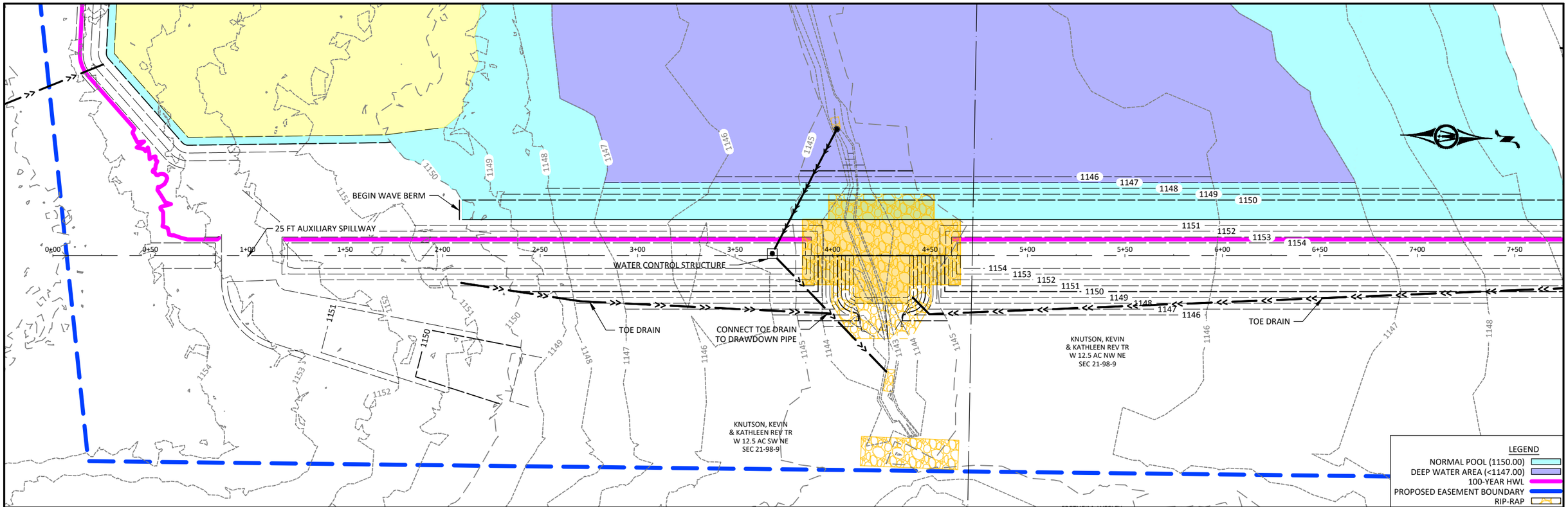

NOTE: EMBANKMENT SHALL BE OVER-BUILT BY 5% OF FILL HEIGHT. THE OVERBUILD FILL VOLUME IS NOT INCLUDED IN THE PLAN QUANTITIES OR SHOWN ON THE PLANS.

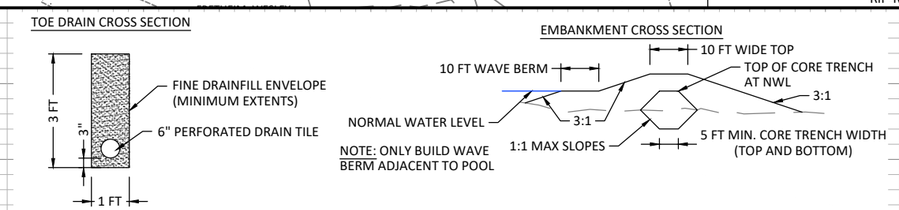

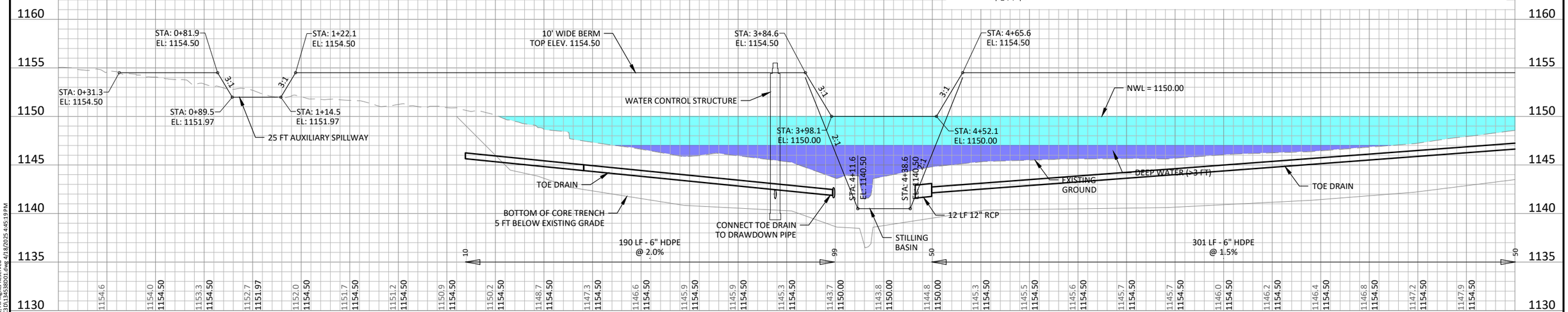

HORZ. 0 25 50 SCALE FEET

VERT. 0 5 10 SCALE FEET

BOLTON & MENK
1519 BALTIMORE DRIVE
AMES, IA 50010
Phone: (515) 233-6100
Email: Ames@bolton-menk.com
www.bolton-menk.com

DESIGNED BCS	REV	DESCRIPTION	DATE
DRAWN BCS	0	FOR PERMIT REVIEW ONLY	04/02/2025
CHECKED JPR			
CLIENT PROJ. NO. 0T7.134538			

IOWA DEPARTMENT OF AGRICULTURE AND LAND STEWARDSHIP

IDALS PROJ. NO. WINN980921A

EMBANKMENT PLAN & PROFILE

SHEET D.01

©Bolton & Menk, Inc. 2025, All Rights Reserved
h:\IDALS\0T7134538\CAD\C3D\134538D01.dwg 4/18/2025 4:45:19 PM

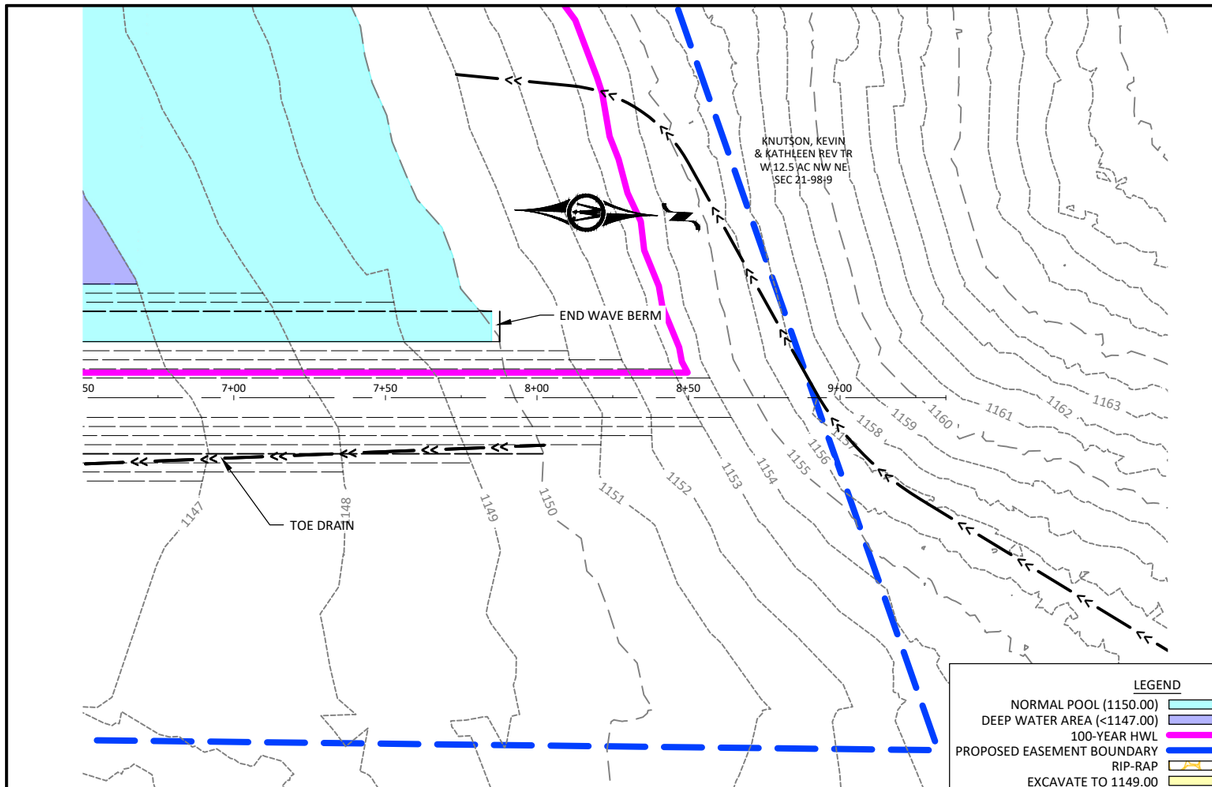

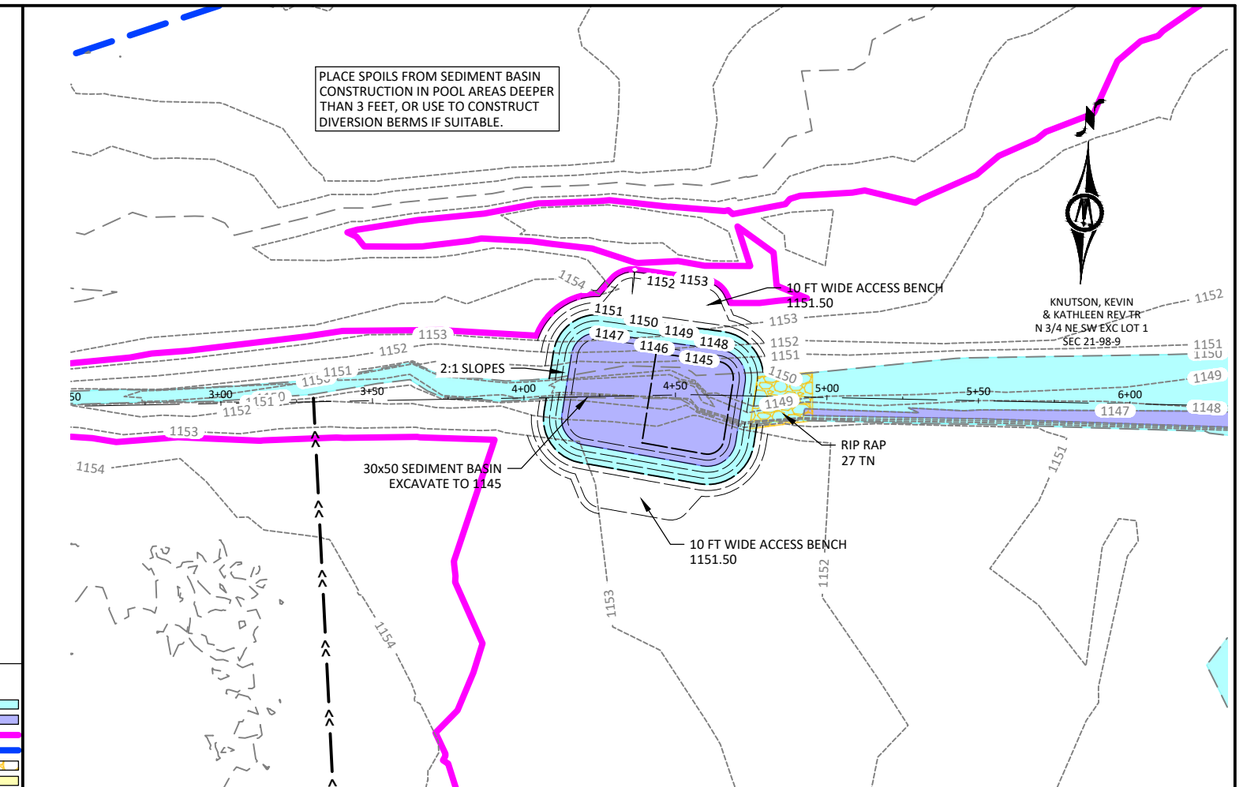

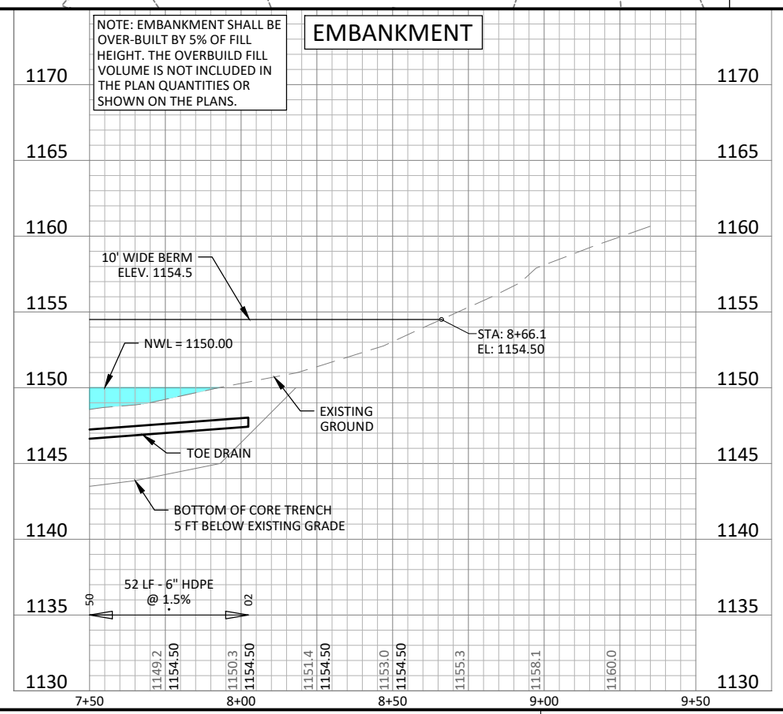

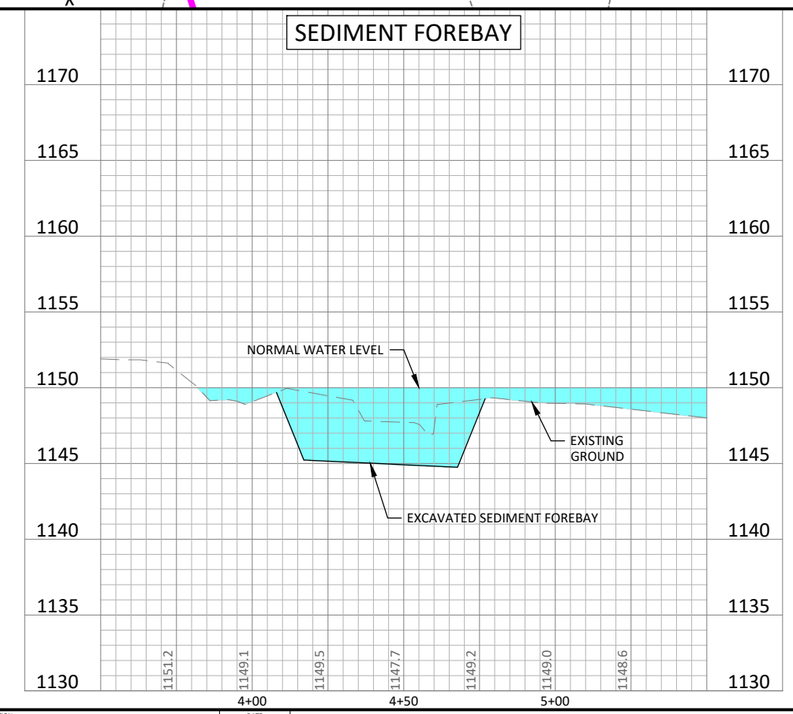

HORZ. 0 25 50 SCALE FEET

VERT. 0 5 10 SCALE FEET

BOLTON & MENK
1519 BALTIMORE DRIVE
AMES, IA 50010
Phone: (515) 233-6100
Email: Ames@bolton-menk.com
www.bolton-menk.com

DESIGNED	REV	DESCRIPTION	DATE
BCS	0	FOR PERMIT REVIEW ONLY	04/02/2025
DRAWN BCS			
CHECKED JPR			
CLIENT PROJ. NO. 0T7.134538			

IOWA DEPARTMENT OF AGRICULTURE AND LAND STEWARDSHIP

IDALS PROJ. NO. WINN980921A

EMBANKMENT & SEDIMENT FOREBAY

SHEET D.02

©Bolton & Menk, Inc. 2025, All Rights Reserved
h:\IDALS\0t7134538\CAD\C3D\134538D01.dwg 4/18/2025 4:45:25 PM

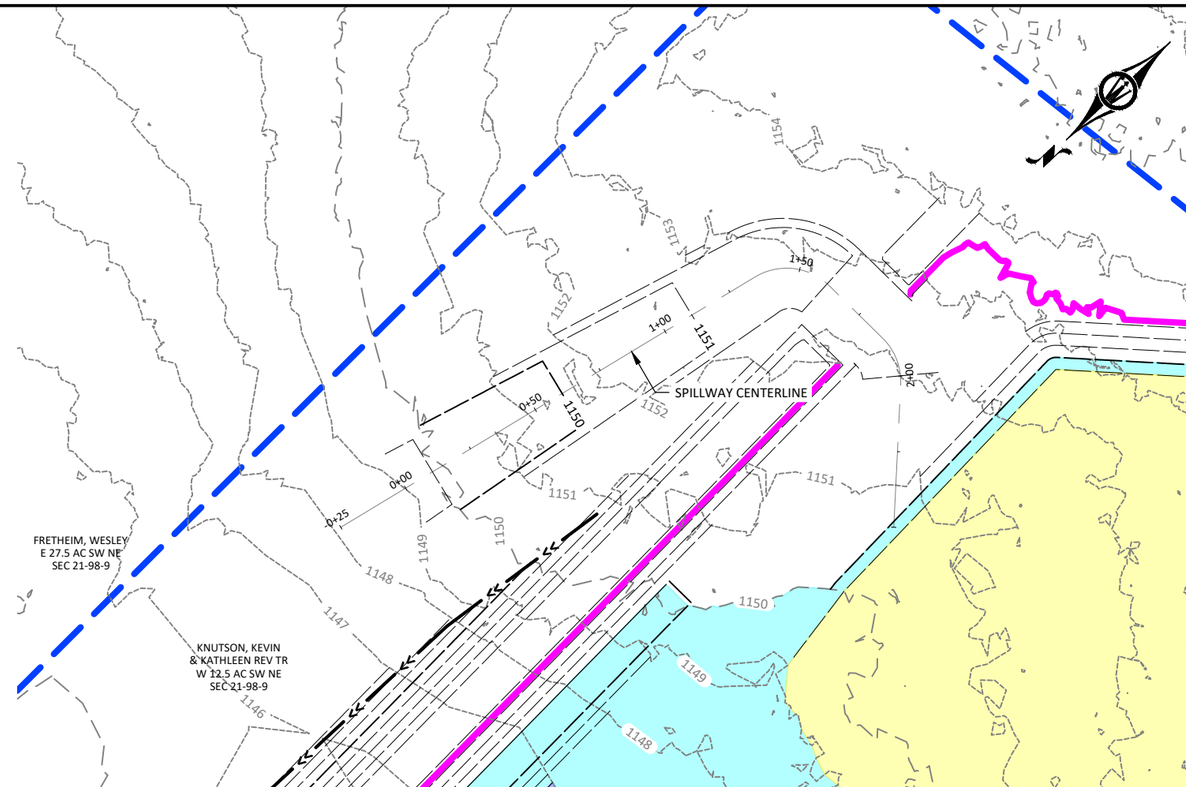

LEGEND
- NORMAL POOL (1150.00)
- DEEP WATER AREA (<1147.00)
- 100-YEAR HWL
- PROPOSED EASEMENT BOUNDARY
- RIP-RAP

AUXILIARY SPILLWAY SECTION THROUGH EMBANKMENT

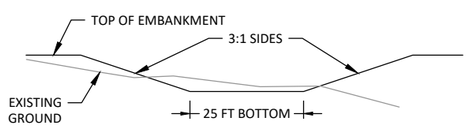

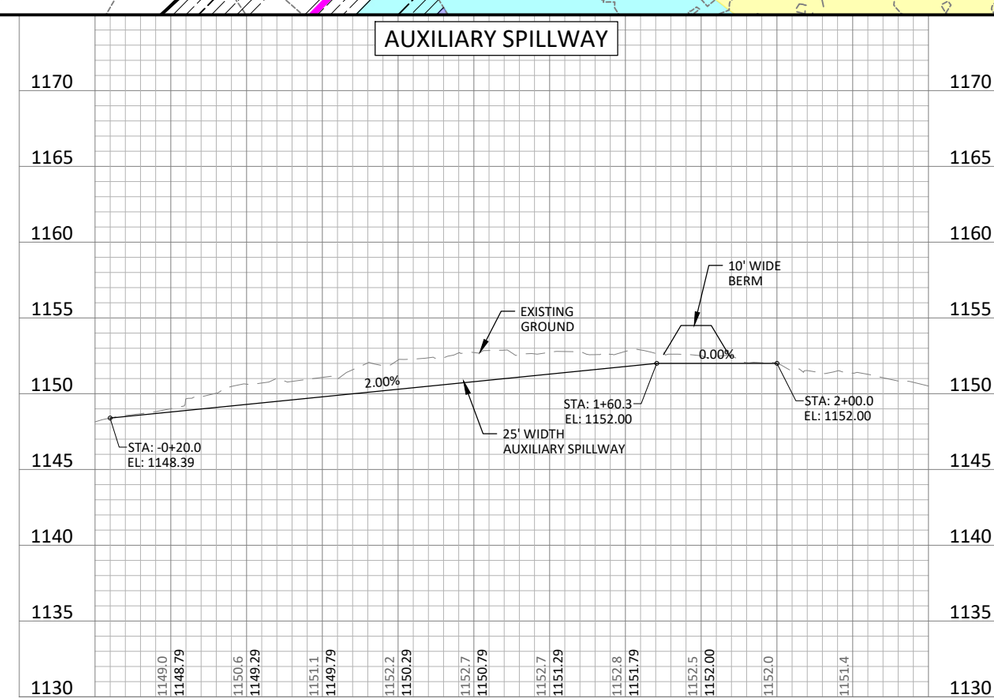

HORZ. 0 25 50 SCALE FEET

VERT. 0 5 10 SCALE FEET

BOLTON & MENK
1519 BALTIMORE DRIVE
AMES, IA 50010
Phone: (515) 233-6100
Email: Ames@bolton-menk.com
www.bolton-menk.com

DESIGNED	BCS
DRAWN	BCS
CHECKED	JPR
CLIENT PROJ. NO.	0T7.134538

REV	DESCRIPTION	DATE
0	FOR PERMIT REVIEW ONLY	04/02/2025

IOWA DEPARTMENT OF AGRICULTURE AND LAND STEWARDSHIP

IDALS PROJ. NO. WINN980921A

AUXILIARY SPILLWAY

SHEET D.03

©Bolton & Menk, Inc. 2025, All Rights Reserved
h:\IDALS\0t7134538\CAD\C3D\134538D01.dwg 4/18/2025 4:45:29 PM

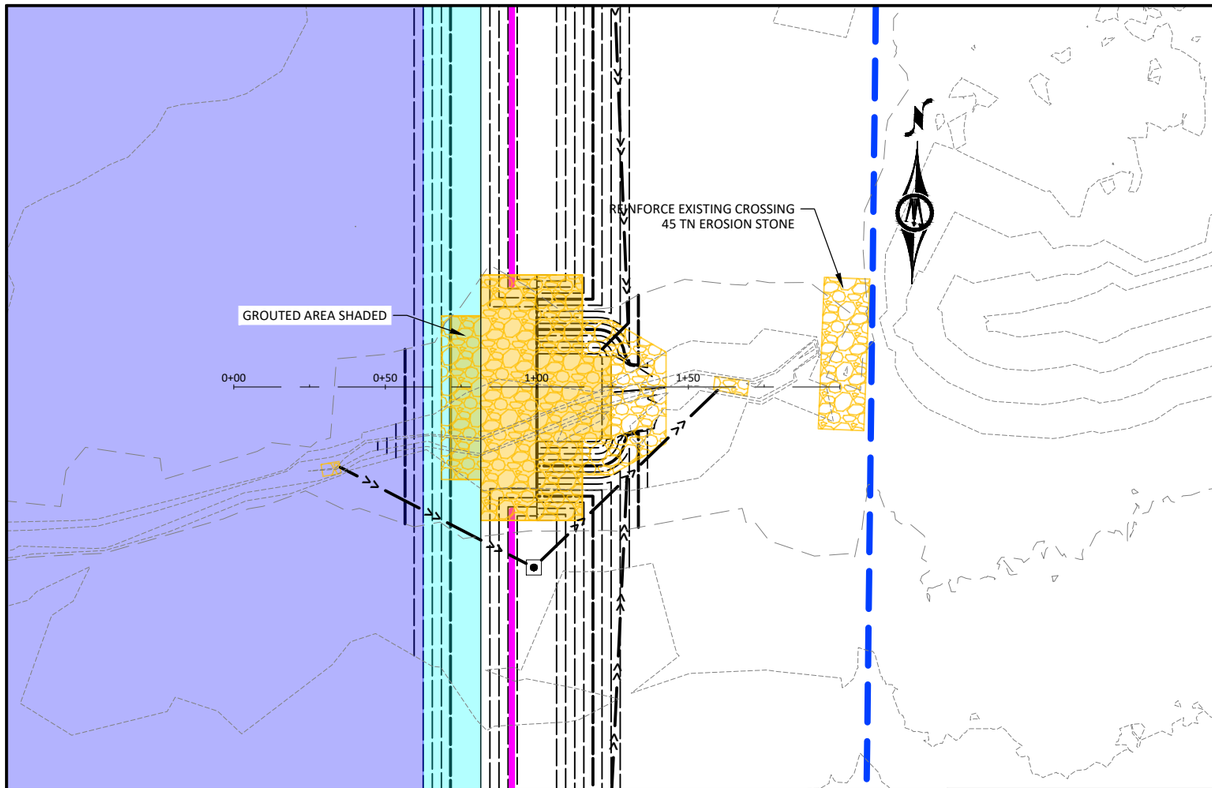

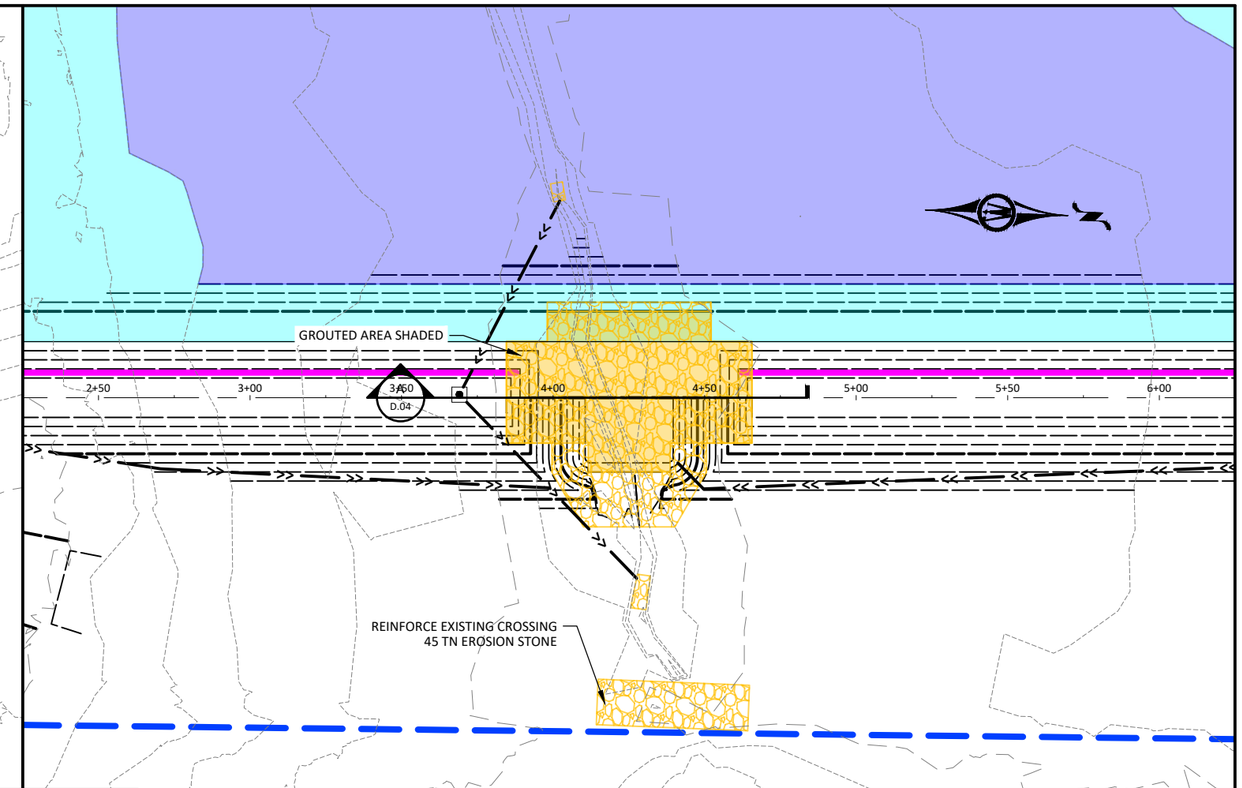

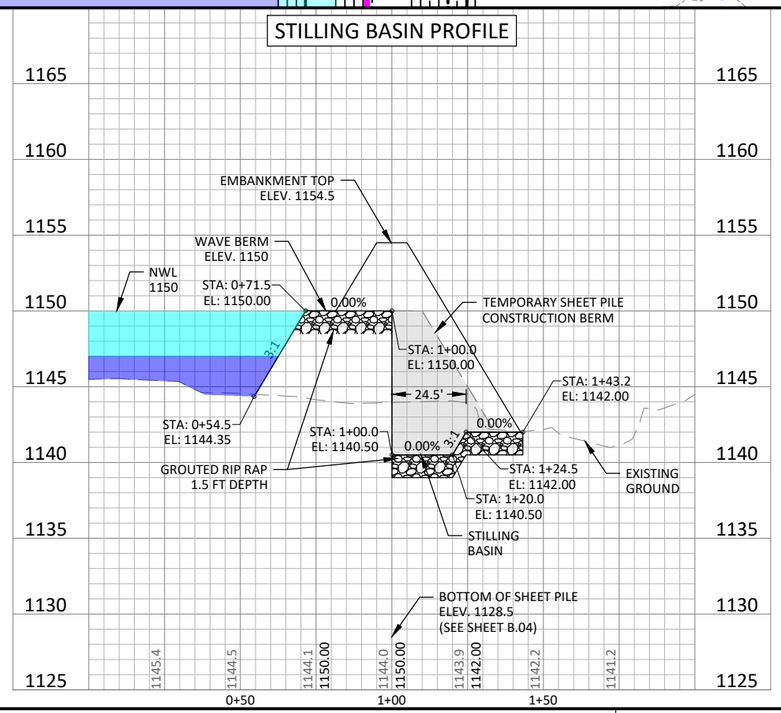

LEGEND

- NORMAL POOL (1150.00)
- DEEP WATER AREA (<1147.00)
- 100-YEAR HWL (1153.42)
- PROPOSED EASEMENT BOUNDARY
- RIP-RAP

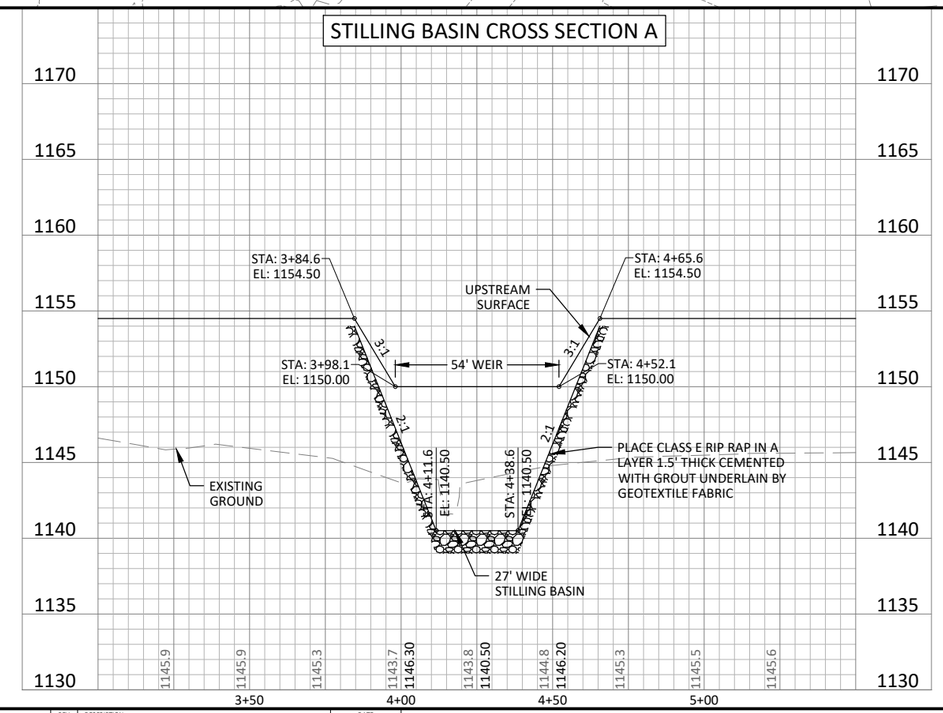

HORZ. 0 25 50 SCALE FEET

VERT. 0 5 10 SCALE FEET

BOLTON & MENK

1519 BALTIMORE DRIVE
AMES, IA 50010
Phone: (515) 233-6100
Email: Ames@bolton-menk.com
www.bolton-menk.com

DESIGNED	BCS
DRAWN	BCS
CHECKED	JPR
CLIENT PROJ. NO.	017.134538

REV	DESCRIPTION	DATE
0	FOR PERMIT REVIEW ONLY	04/02/2025

IOWA DEPARTMENT OF AGRICULTURE AND LAND STEWARDSHIP

IDALS PROJ. NO. WINN980921A

STILLING BASIN DETAIL

SHEET D.04

©Bolton & Menk, Inc. 2025, All Rights Reserved
h:\IDALS\017134538\CAD\C3D\134538B02.dwg 4/18/2025 4:45:57 PM

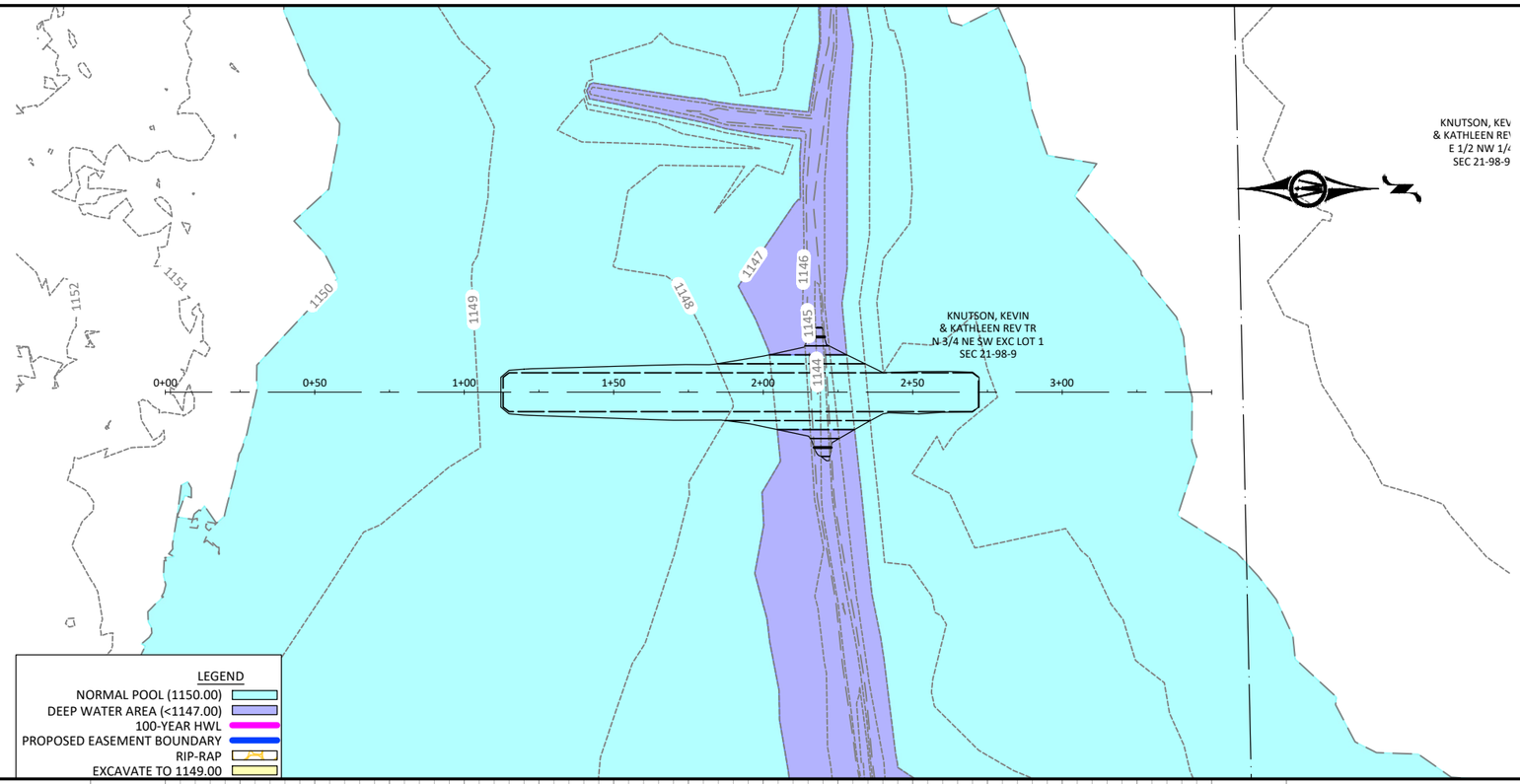

DIVERSION BERM 1

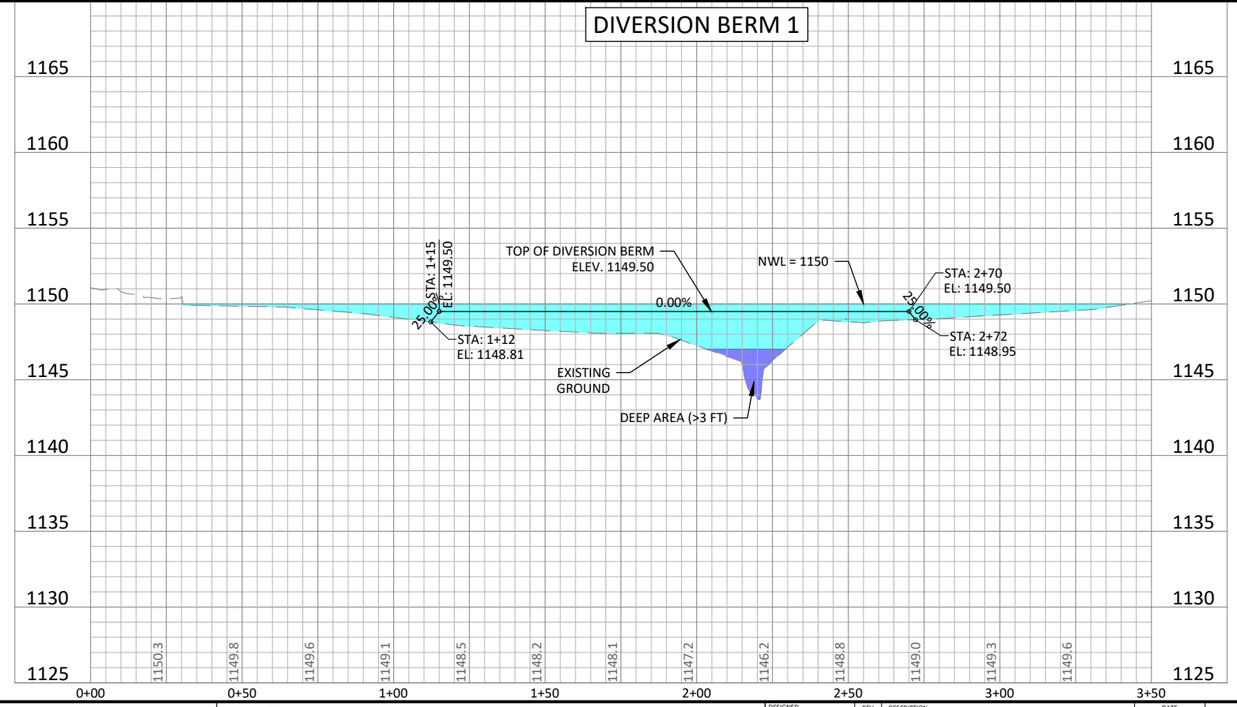

HORZ. 0 25 50 SCALE FEET

VERT. 0 5 10 SCALE FEET

BOLTON & MENK
1519 BALTIMORE DRIVE
AMES, IA 50010
Phone: (515) 233-6100
Email: Ames@bolton-menk.com
www.bolton-menk.com

DESIGNED	REV	DESCRIPTION	DATE
BCS	0	FOR PERMIT REVIEW ONLY	04/02/2025
DRAWN BCS			
CHECKED JPR			
CLIENT PROJ. NO. 017.134538			

IOWA DEPARTMENT OF AGRICULTURE AND LAND STEWARDSHIP

IDALS PROJ. NO. WINN980921A

DIVERSION BERM 1

SHEET D.05

©Bolton & Menk, Inc. 2025, All Rights Reserved
h:\IDALS\017134538\CAD\C3D\134538D05.dwg 4/18/2025 4:46:11 PM

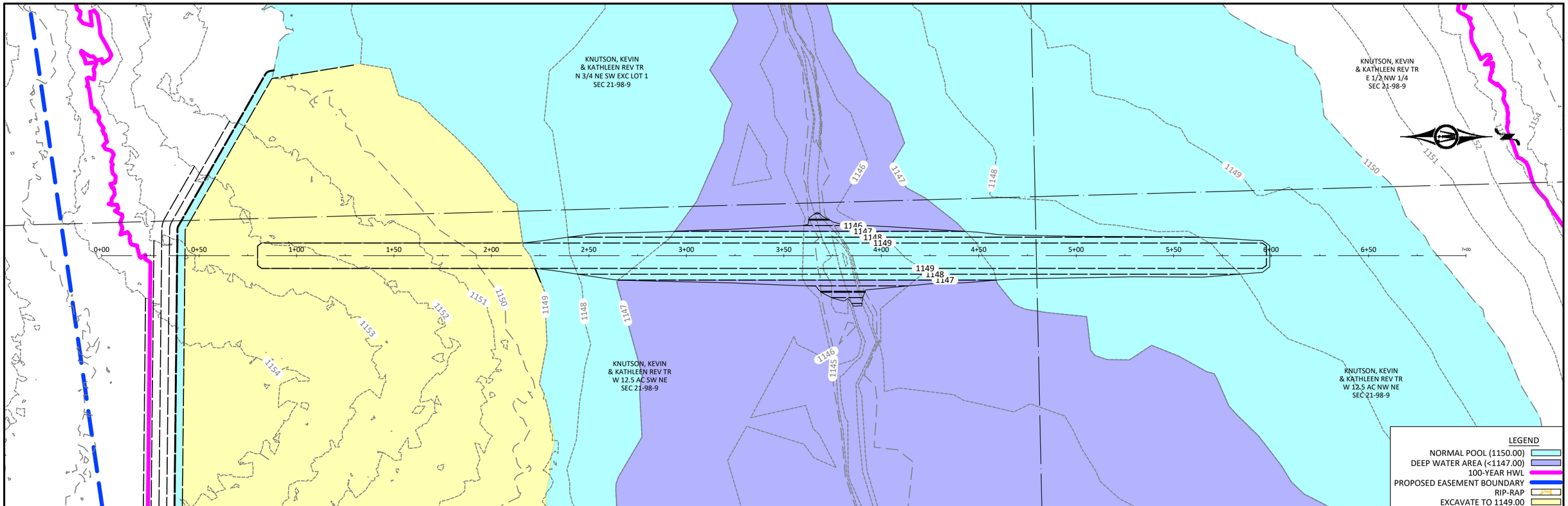

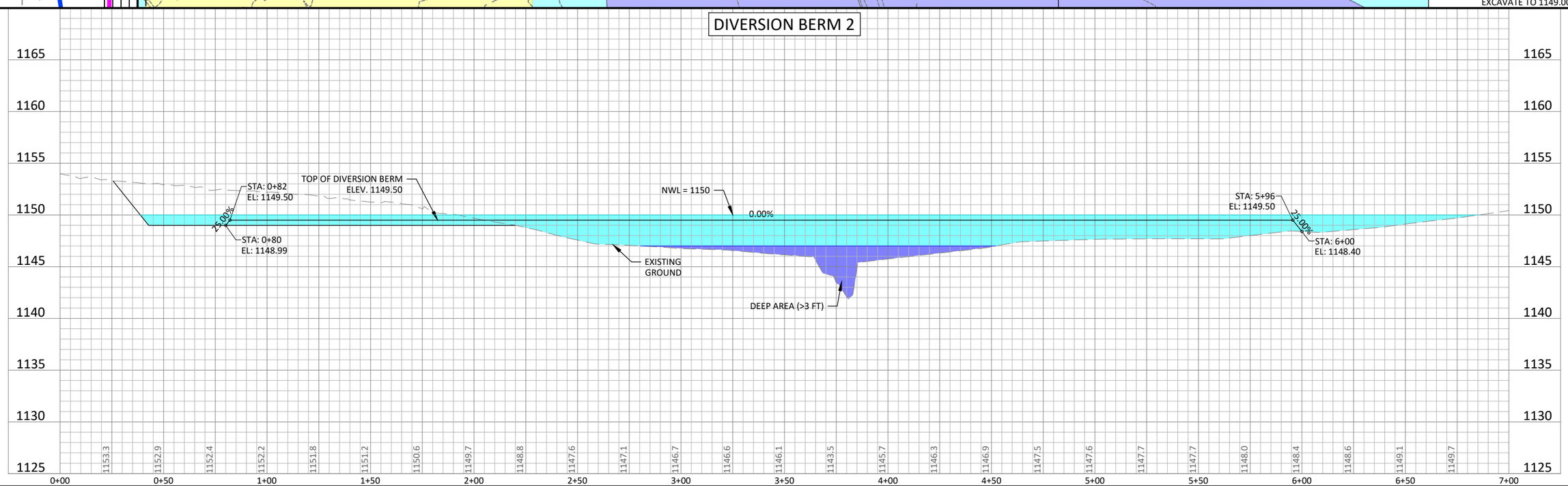

HORZ. 0 25 50 SCALE FEET

VERT. 0 5 10 SCALE FEET

BOLTON & MENK

1519 BALTIMORE DRIVE
AMES, IA 50010
Phone: (515) 233-6100
Email: Ames@bolton-menk.com
www.bolton-menk.com

DESIGNED	BCS
DRAWN	BCS
CHECKED	JPR
CLIENT PROJ. NO.	0T7.134538

REV	DESCRIPTION	DATE
0	FOR PERMIT REVIEW ONLY	04/02/2025

IOWA DEPARTMENT OF AGRICULTURE AND LAND STEWARDSHIP

IDALS PROJ. NO. WINN980921A

DIVERSION BERM 2

SHEET D.06

©Bolton & Menk, Inc. 2025, All Rights Reserved
h:\IDALS\0T7134538\CAD\C3D\134538D05.dwg 4/18/2025 4:46:15 PM

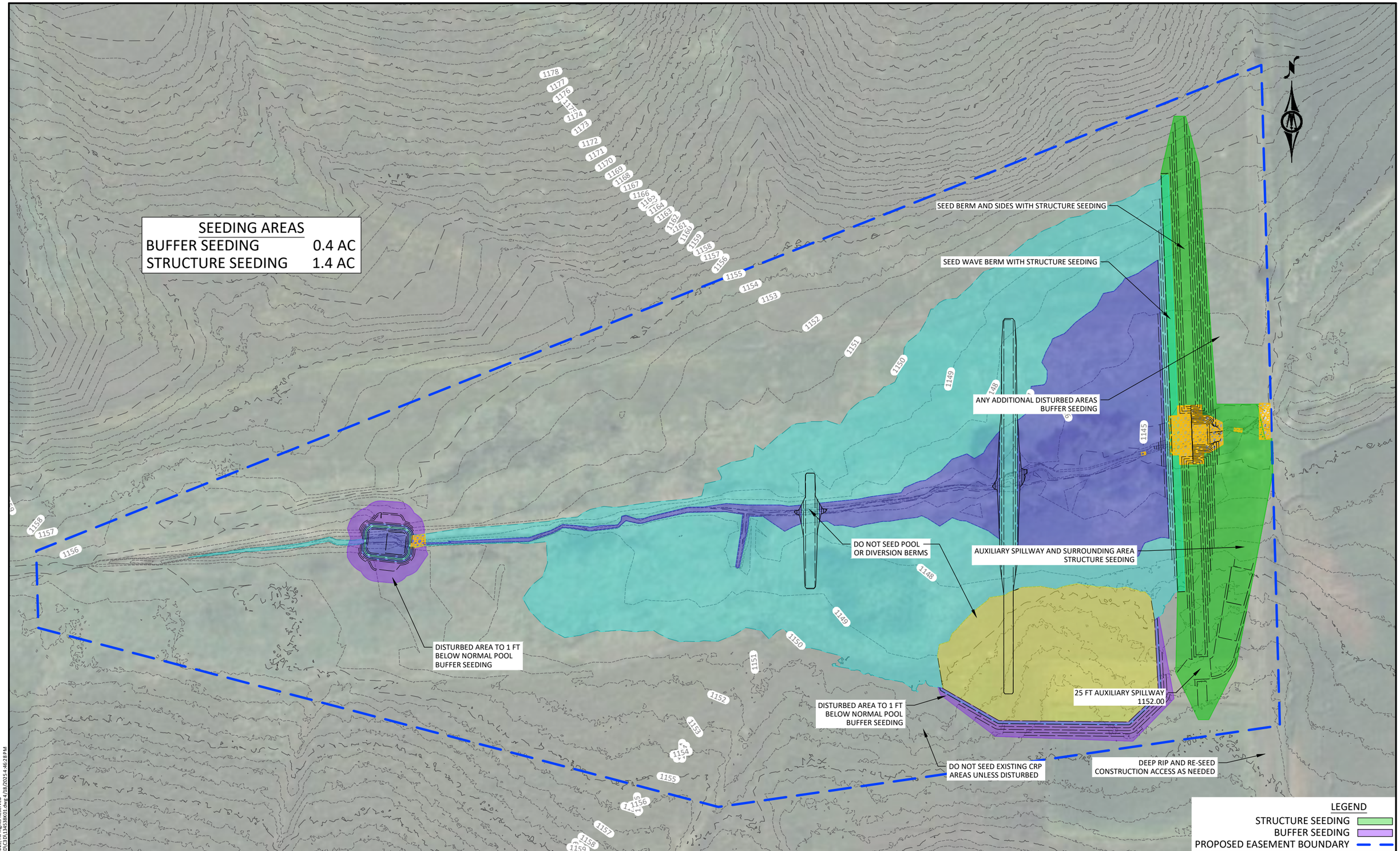

0 60 120
SCALE FEET

BOLTON & MENK

1519 BALTIMORE DRIVE
AMES, IA 50010
Phone: (515) 233-6100
Email: Ames@bolton-menk.com
www.bolton-menk.com

DESIGNED	BCS
DRAWN	BCS
CHECKED	JPR
CLIENT PROJ. NO.	0T7.134538

REV	DESCRIPTION	DATE
0	FOR PERMIT REVIEW ONLY	04/02/2025

IOWA DEPARTMENT OF AGRICULTURE AND LAND STEWARDSHIP

IDALS PROJ. NO. WINN980921A

SEEDING PLAN

SHEET K.01

©Bolton & Menk, Inc. 2025, All Rights Reserved
h:\IDALS\0t7134538\CAD\C3D\134538K01.dwg 4/18/2025 4:46:28 PM

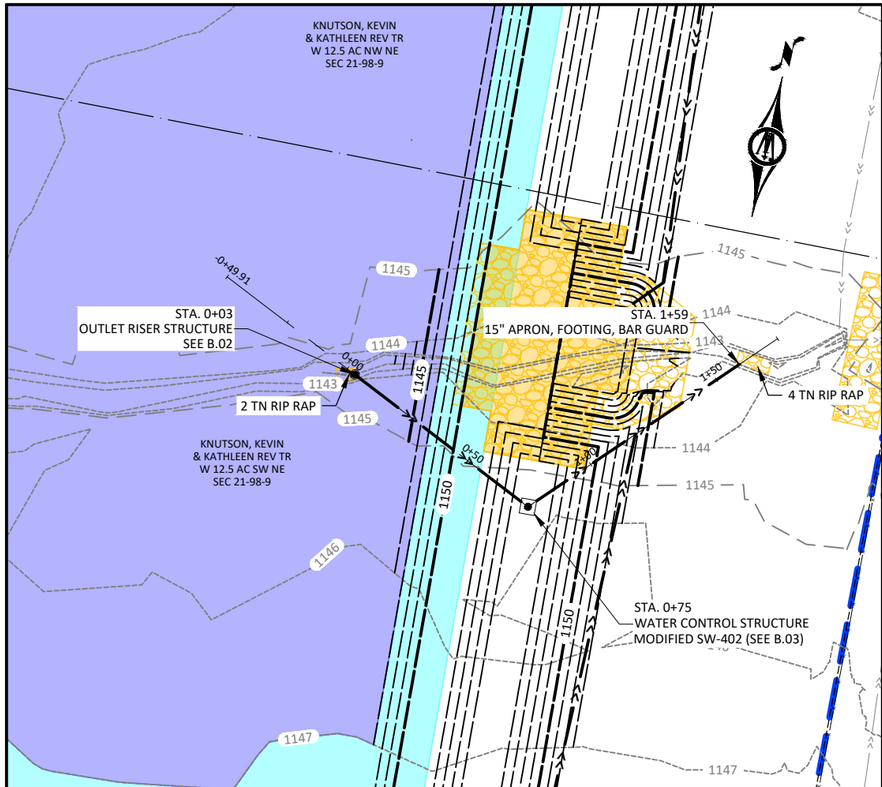

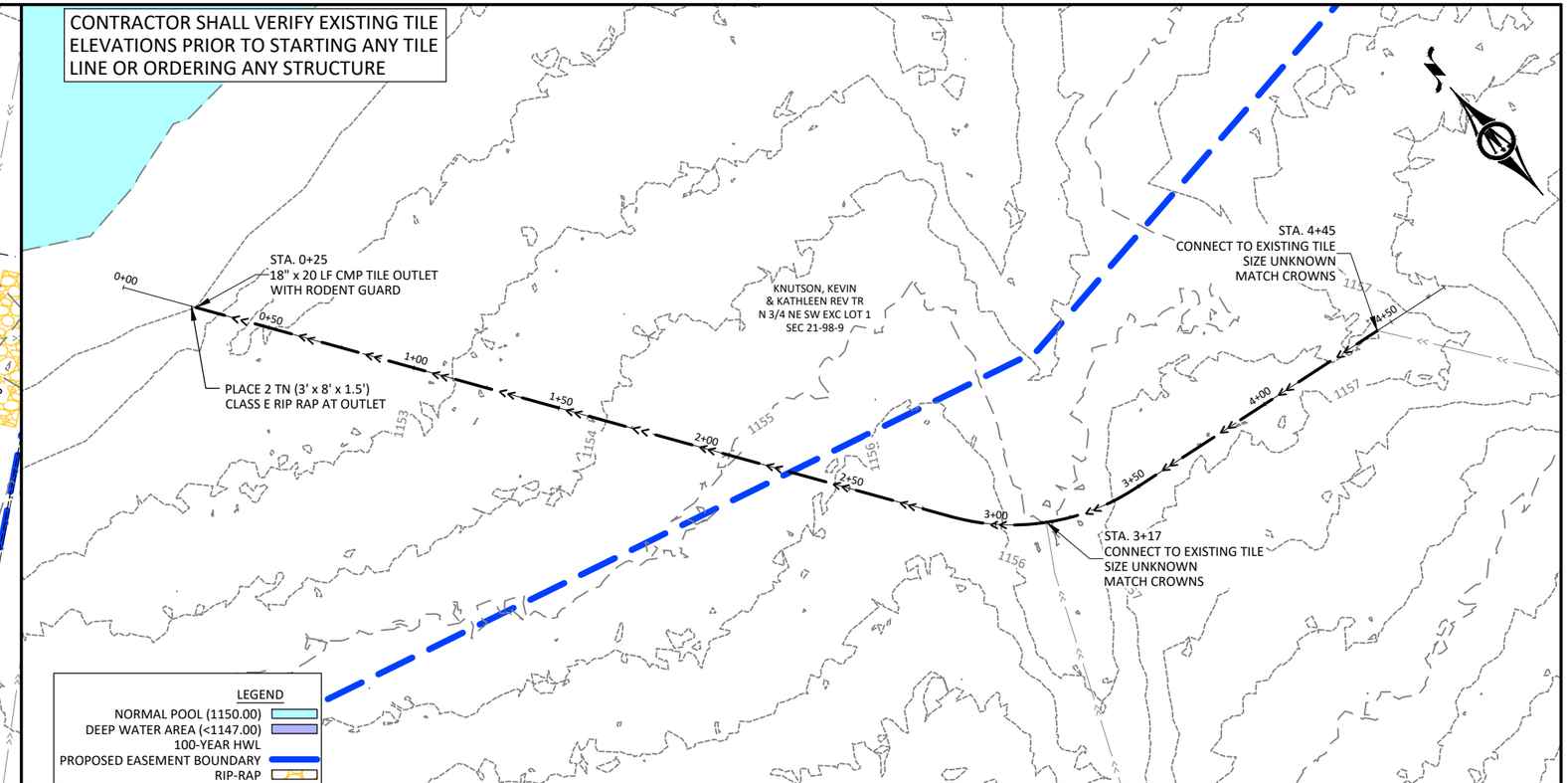

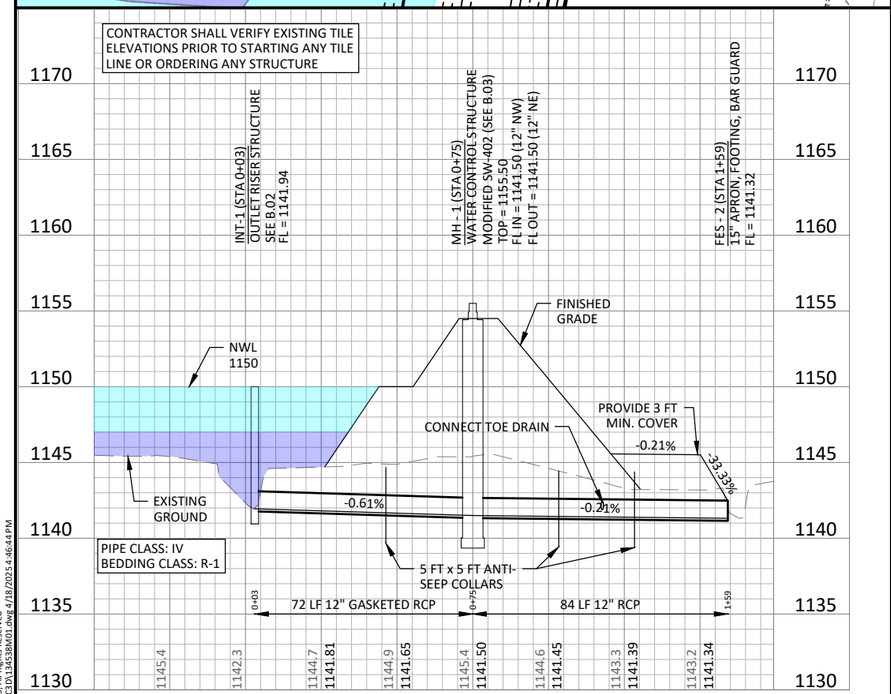

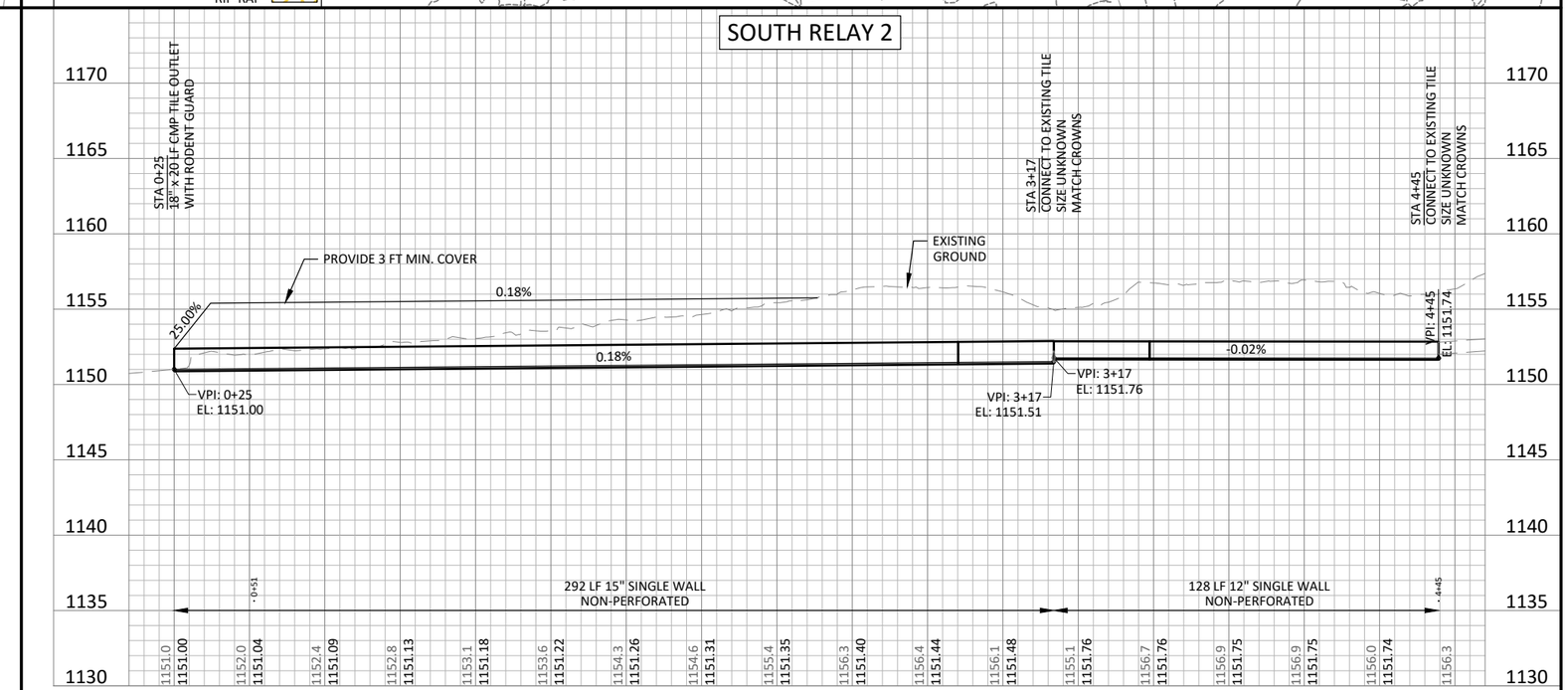

HORZ. 0 25 50 SCALE FEET

VERT. 0 5 10 SCALE FEET

BOLTON & MENK
1519 BALTIMORE DRIVE
AMES, IA 50010
Phone: (515) 233-6100
Email: Ames@bolton-menk.com
www.bolton-menk.com

DESIGNED	BCS
DRAWN	BCS
CHECKED	JPR
CLIENT PROJ. NO.	07.134538

REV	DESCRIPTION	DATE
0	FOR PERMIT REVIEW ONLY	04/02/2025

IOWA DEPARTMENT OF AGRICULTURE AND LAND STEWARDSHIP

IDALS PROJ. NO. WINN980921A

DRAWDOWN PIPE & SOUTH RELAY 2

SHEET M.01

©Bolton & Menk, Inc. 2025, All Rights Reserved
h:\IDALS\07134538\CAD\C3D\134538M01.dwg 4/18/2025 4:46:44 PM

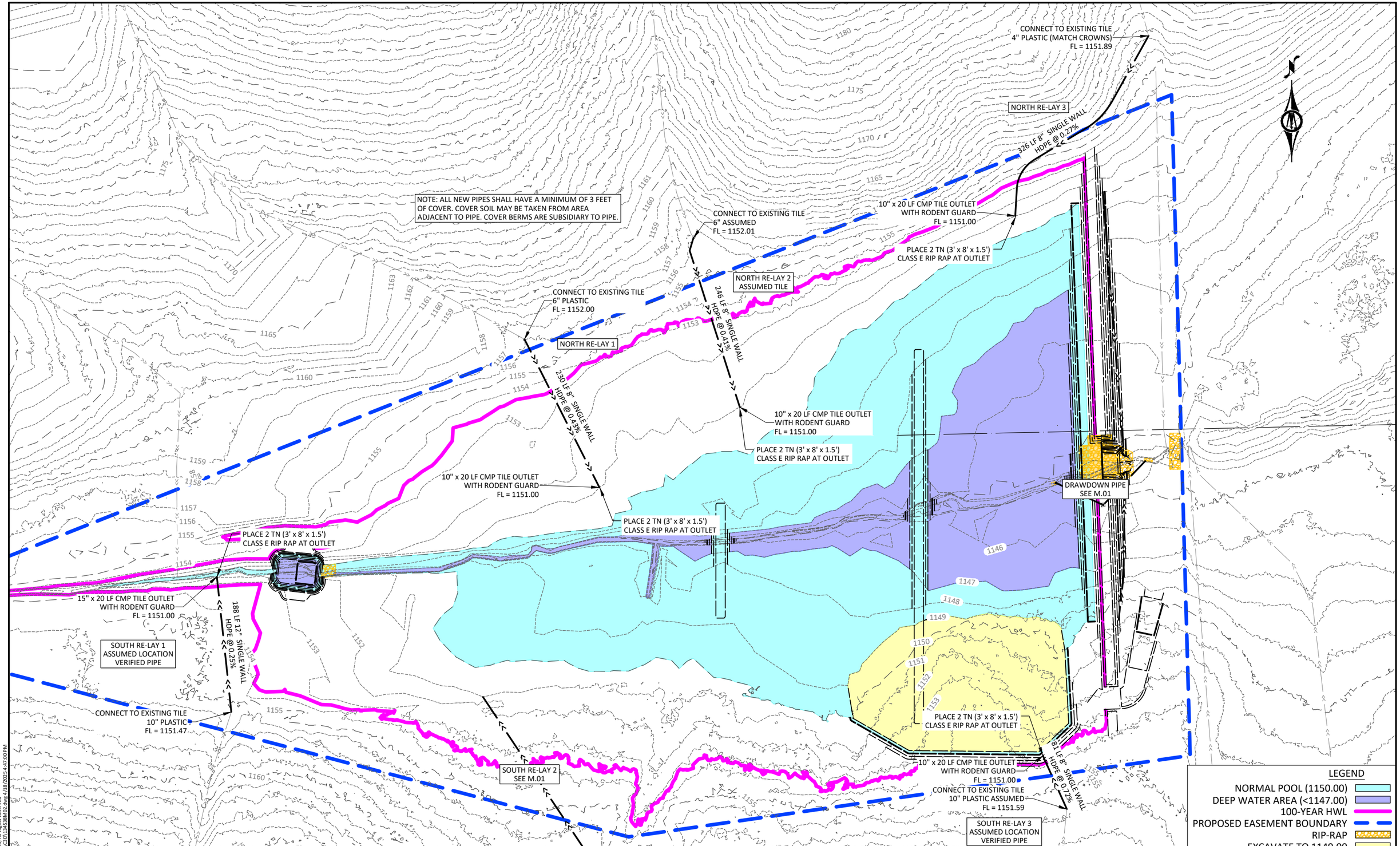

HORZ. 0 60 120
SCALE FEET

BOLTON & MENK
1519 BALTIMORE DRIVE
AMES, IA 50010
Phone: (515) 233-6100
Email: Ames@bolton-menk.com
www.bolton-menk.com

DESIGNED	REV	DESCRIPTION	DATE
BCS	0	FOR PERMIT REVIEW ONLY	04/02/2025
DRAWN BCS			
CHECKED JPR			
CLIENT PROJ. NO. 017.134538			

IOWA DEPARTMENT OF AGRICULTURE AND LAND STEWARDSHIP
IDALS PROJ. NO. WINN980921A
TILE RE-LAYS

SHEET M.02

©Bolton & Menk, Inc. 2025, All Rights Reserved
h:\IDALS\017134538\CAD\C3D\134538M02.dwg 4/18/2025 4:47:00 PM