STATE OF IOWA
DEPARTMENT OF AGRICULTURE AND LAND STEWARDSHIP
DIVISION OF SOIL CONSERVATION AND WATER QUALITY

Cla953734C NUTRIENT REDUCTION WETLAND PROJECT

CONSTRUCTION CONTRACT
BID NO. 26-11

SECTION 34, TOWNSHIP 95 NORTH, RANGE 37 WEST
CLAY COUNTY, IOWA

PREPARED FOR: IOWA DEPARTMENT OF AGRICULTURE & LAND STEWARDSHIP
DIVISION OF SOIL CONSERVATION AND WATER QUALITY
HOOVER STATE OFFICE BUILDING
1305 EAST WALNUT STREET
DES MOINES, IOWA 50319

PREPARED BY: BOLTON & MENK
1519 BALTIMORE DR
AMES, IA 50010

October 2026

TABLE OF CONTENTS

GENERAL REQUIREMENTS — Page(s)

DOCUMENT AA	Notice-to-Bidders	AA 1-2
DOCUMENT BB	Instruction–to-Bidders	BB 1-5
DOCUMENT CC	Proposal and Schedule of Prices	CC 1-4
DOCUMENT DD	Construction Contract	DD 1-2
DOCUMENT EE	Proposal Guarantee (Bid Bond)	EE 1
DOCUMENT FF	General Conditions	FF 1-28
DOCUMENT GG	Special Conditions	GG 1-3
DOCUMENT NN	Performance Bond	NN 1-3

CONSTRUCTION SPECIFICATIONS

IA-01	Site Preparation	1-1 to 1-2
IA-05	Pollution Control	5-1 to 5-2
IA-06	Seeding and Mulching for Protective Cover	6-1 to 6-4
IA-08	Mobilization with standard sign installation detail	8-1 to 8-3
IA-09	Drain Tile Investigation and Removal	9-1 to 9-4
IA-11	Removal of Water	11-1 to 11-2
IA-13	Sheet Piling	13-1 to 13-2
IA-21	Excavation	21-1 to 21-3
IA-23	Earthfill	23-1 to 23-4
IA-24	Drainfill	24-1 to 24-3
IA-26	Topsoiling	26-1 to 26-2
IA-31	Concrete	31-1 to 31-7
IA-46	Tile Drains for Land Drainage	46-1 to 46-4
IA-51	Corrugated Metal Pipe Conduits	51-1 to 51-3
IA-61	Loose Rock Riprap	61-1 to 61-2
IA-62	Concrete Grout for Riprap	62-1 to 62-3
IA-85	NOT FOUND	85-1 to 85-2
IA-95	Geotextile	95-1 to 95-4

PLANS

TITLE SHEET	A.01	02/25/2026
PLAN OVERVIEW	A.02	02/25/2026
EXISTING CONDITIONS AND REMOVALS	A.03	02/25/2026
WATER CONTROL STRUCTURE DETAILS	B.01	02/25/2026
SHEET PILE DETAILS	B.02	02/25/2026
CPDT INSTALLATION DETAILS	B.03	02/25/2026
RCP INSTALLATION DETAILS	B.04	02/25/2026
MISCELLANEOUS DETAILS	B.05	02/25/2026
ESTIMATED QUANTITIES	C.01	02/25/2026
GRADING OVERVIEW	D.01	02/25/2026
PLAN & PROFILE - EMBANKMENT	D.02	02/25/2026
PLAN & PROFILE - SITLLING BASIN & OUTLET CHANNEL	D.03	02/25/2026
PLAN & PROFILE - AUXILIARY SPILLWAY	D.04	02/25/2026
PLAN & PROFILE - DIVERSION BERMS	D.05	02/25/2026

Continued on next page

TABLE OF CONTENTS

SEEDING OVERVIEW	K.01	02/25/2026
PLAN & PROFILE - TILE MAIN RE-LAY	M.01	02/25/2026
PLAN & PROFLE - DRAWDOWN PIPE & NEW TILE INSTALLATION	M.02	02/25/2026

APPENDIX I – CONSTRUCTION ADMINISTRATION FORMS

DOCUMENT LL	Notice-of-Award	LL 1
DOCUMENT MM	Notice-to-Proceed	MM 1
DOCUMENT JJ	Construction Progress Schedule	JJ 1-2
DOCUMENT SS	Application & Certificate for Payment	SS 1-2
DOCUMENT HH	Change Order Request	HH 1-2
DOCUMENT II	Construction Contract Amendment	II 1-3
DOCUMENT QQ	Iowa Sales & Use Tax Form	QQ 1

APPENDIX II – ADDENDA & BID TAB

[Addenda, if any, and bid tab to be added after bidding]

GENERAL REQUIREMENTS

NOTICE-TO-BIDDERS

Cla953734C Nutrient Reduction Wetland Project
Section 34, Township 95 North, Range 37 West
Clay County, Iowa

Sealed bids will be received by the Iowa Department of Agriculture & Land Stewardship, Division of Soil Conservation and Water Quality (Division), via the Iowa Management of Procurement and Contracts System (IMPACS), until 3:00 PM local time, Tuesday, 10/27/2026. The bid opening, open to the public, will be held through IMPACS at 3:00 PM local time, on Tuesday, 10/27/2026, when bids will be read aloud. Interested parties may call in to hear the bid opening using the Microsoft Teams call-in number: +1 469-998-7627 code 910454647#. Bids must be submitted on the appropriate bid forms provided and shall include a bid bond in the amount of ten percent (10%). Bidders must also be registered with the Iowa Department of Inspections, Appeals & Licensing.

This project is for a traditional breakpoint nutrient reduction wetland. In general, the work involves, but is not limited to, selective clearing, excavation, grading, steel sheetpile installation, tile installation, water control structure, riprap, concrete grout and seeding. This project includes about 15,204 cubic yards of earthwork, installation of 2,523 square feet of steel sheetpile, water control structure, 540 linear feet (LF) of HDPE tile installation, 957 LF of reinforced concrete pipe (RCP), 303 tons of riprap, 46 cubic yards of concrete grout and 15.2 acres of seeding. The estimated construction cost range for this project is $450,000 to $550,000.

Construction will commence within 7 days of the preconstruction meeting, unless otherwise mutually agreed upon.

Construction deadline: 11/15/2027
Seeding deadline-buffer: 12/15/2027 (Must be completed within the buffer seeding period.)
Seeding deadline-structure: 12/15/2027 (Must be completed within the structure seeding period.)

Due to the lack of in-person attendance at recent pre-bid meetings, a virtual attendance option is being added.

If you plan to attend the pre-bid meeting in person, you MUST email Tracy.Blocker@Iowaagriculture.gov by 3:00 PM the day prior to the pre-bid meeting to confirm your in-person attendance.

If no one has indicated that they will attend in person by the deadline, the pre-bid meeting will be held **virtually only**. No in-person meeting will be held in that circumstance.

Attendance at the pre-bid conference by prospective bidders is not mandatory but is encouraged.

- **In-Person Pre-Bid Meeting Option: RSVP Required by 3:00 PM the Day Prior**
  10:30:00 AM, on 10/07/2026
  Bolton & Menk Office 218 11th ST SW, Spencer, IA 51301
  515-344-6279

- **Virtual Pre-Bid Meeting Option: This will be the only option if no one has indicated they will attend in person**
  TEAMS Link: https://teams.microsoft.com/meet/222552114302613?p=AfmTpHDTC68cP7S6uO
  (Audio & Video)
  Call-in: 1 469-998-7627 Code 479949407#
  (Audio only)

The Plans and Construction Specifications governing the construction of the proposed improvements have been prepared by Brandon Short, P.E., Bolton & Menk, brandon.short@bolton-menk.com, and are hereby made a part of this notice by reference, and the proposed contract shall be executed in compliance therewith. Copies of the Contract Documents, including Plans, Construction Specifications, and Bid Package, are available through the website link:

https://das.iowa.gov/vendors/bidding-opportunities#vendor-bid-opportunities
• View Other Agency Hosted Solicitations

In order to be included on the plan holders list, which is required to receive meeting minutes, addenda, and an updated plan holders list, interested parties must make a written email request to Tracy Blocker, Division, at Tracy.Blocker@Iowaagriculture.gov, or make a verbal request to the Division by telephone at 515-344-6279. Bidders who attend and sign in to the pre-bid conference will be added to the plan holders list.

A printed copy of the Plans and Construction Specifications can be viewed by appointment by contacting Tracy Blocker, Division, at Tracy.Blocker@iowaagriculture.gov or 515-344-6279. Printed copies of the Specifications and Plans will be provided to the successful bidder.

The successful bidder shall be required to furnish a Performance/Payment Bond in an amount equal to one hundred percent (100%) of the contract price.

Questions concerning the Plans and Construction Specifications should be submitted in writing and addressed to Brandon Short, P.E., Bolton & Menk, brandon.short@bolton-menk.com, with a copy to Tracy Blocker, Division, at Tracy.Blocker@iowaagriculture.gov.

All other questions concerning the Contract Documents should be addressed to Tracy Blocker, Division, at Tracy.Blocker@iowaagriculture.gov or 515-344-6279.

To be considered for inclusion in a final addendum, written questions must be received by 3:00 PM on Wednesday, October 14, 2060.

The Division reserves the right to reject any or all proposals and to waive technicalities and irregularities.

BIDDER LOGIN – https://solutions.sciquest.com/apps/Router/SupplierLogin?CustOrg=DASIowa

END OF DOCUMENT AA

INSTRUCTIONS TO BIDDERS

TABLE OF CONTENTS

01	BIDDER'S KNOWLEDGE & PRE-BID CONFERENCE	BB-1
02	BIDDER'S QUALIFICATIONS	BB-1
03	OBTAINING BID DOCUMENTS	BB-2
04	METHOD OF BIDDING	BB-2
05	SUBMISSION OF BIDS	BB-2
06	BID SECURITY	BB-3
07	WITHDRAWAL OF BIDS	BB-3
08	EVALUATION OF BIDS AND AWARD OF CONTRACT	BB-3
09	TAXES	BB-3
10	EXECUTION OF CONTRACT	BB-3
11	QUANTITIES	BB-4
12	QUESTIONS AND ADDENDA	BB-4
13	PRECONSTRUCTION CONFERENCE	BB-4
14	SUMMARY OF BID SUBMITTAL REQUIREMENTS	BB-4

01 BIDDER'S KNOWLEDGE & PRE-BID CONFERENCE

The proposed project is located as specified in the Notice-to-Bidders (*Document AA*). Bidders shall familiarize themselves with the Contract Documents and conditions that will affect the construction. Specific items relating to the preparation of bids and the submission thereof are listed elsewhere in the Contract Documents. It will be the responsibility of the bidder to examine all Contract Documents and to make a personal examination of the job site and the physical conditions that may affect bidding and performance under the Contract.

A pre-bid conference will be held at the location, date and time as set forth in the Notice-to-Bidders. Attendance at the pre-bid conference by prospective bidders is not mandatory but is encouraged.

02 BIDDER'S QUALIFICATIONS

To demonstrate qualifications to perform the Work, each Bidder must be prepared to submit, within ten (10) days of Division of Soil Conservation and Water Quality (Division) request, written evidence, such as financial data, previous experience, present commitments and other such data as may be called for below.

- Contractors are required to be registered with the Iowa Department of Inspections, Appeals & Licensing.
- Bidder must verify the number of years engaged in the contracting business under the present firm name, and the name of the state where incorporated.
- A Bidder must show ownership of twenty percent (20%) of their own equipment and list equipment that will be rented or subcontracted by the Bidder to evaluate if the Bidder can complete the Work in accordance with the Bidding Documents.
- Bidder must provide performance record giving the description, location, and telephone numbers of similar projects constructed in a satisfactory manner by the Bidder.
- Bidder must submit a list of projects presently under contract, the approximate contract amount, and percent of completion of each.
- Bidder must demonstrate satisfactory performance on previous and present contracts similar in scope to the subject of this project.
- Bidder must provide a list of contracts which resulted in lawsuits, contracts defaulted, and a statement of the Bidder indicating whether or not the Bidder has ever filed bankruptcy.

- Bidder must provide the technical experience of personnel guaranteed to be employed in the responsible charge of the Work stating whether the personnel have or have not performed satisfactorily on other contracts of like nature and magnitude or comparable difficulty at similar rate of progress.
- Bidder must provide such additional information as will assist the Division in determining whether the Bidder is adequately prepared to fulfill the contract.

If the successful bidder is a non-Iowa corporation, the bidder shall submit proof to the Division, prior to the execution of the contract, of authorization by the Secretary of State to do business in Iowa.

03 OBTAINING BID DOCUMENTS

An electronic copy of all of the bidding documents for this project has been posted to the Iowa Department of Agriculture and Land Stewardship website: https://iowaagriculture.gov/dscwq/requests-proposals and

https://das.iowa.gov/vendors/bidding-opportunities#vendor-bid-opportunities

- View Other Agency Hosted Solicitations
- **BIDDER LOGIN** - https://solutions.sciquest.com/apps/Router/SupplierLogin?CustOrg=DASIowa

These include Document AA – Notice to Bidders, Document BB – Instruction to Bidders, Document CC – Proposal and Schedule of Prices, Document DD – Construction Contract, Document EE – Proposal Guarantee (Bid Bond), Document FF – General Conditions, Document GG – Special Conditions, Document NN – Performance Bond. The website also contains the Construction Specifications and the Construction Plans developed by the engineer. The documents on these websites can be viewed or printed by those interested in the project.

The Division will maintain an updated plan holders list for this project. In order to be added to the plan holders list, the interested party must contact the Division by phone, fax, letter, or e-mail. Bidders who attend and sign-in to the pre-bid conference will be added to the plan holders list. **Viewing the documents on-line does not automatically add you to the plan holders list**. Those listed as a plan holder will receive meeting minutes, any and all addenda and an updated plan holders list. These documents can be received directly from the Division.

04 METHOD OF BIDDING

Bidders shall submit unit price bids as required for the work items covered by the Bid Documents. Failure to submit unit prices as required shall result in disqualification of the bid. Prices shall cover complete work and include all costs incidental thereto, unless otherwise indicated.

The Division may change location, quantities, and combination of units as required during the progress of construction. If work is added to the Contract that is not covered by a bid price set forth in the Proposal and Schedule of Prices (*Document CC*), a Change Order or Contract Amendment as necessary, including the negotiated cost for said work, will be issued by the Division prior to the work being performed.

Bids will be compared using quantities shown in the proposal. The quantities of work shown represent the Engineer's estimate of work to be completed as shown on the plans and measured in accordance with provisions in this Contract defining the method to be used in measuring such quantities. The Contractor's compensation will be computed on the basis of final quantities of completed work. Where a lump sum is shown on the proposal as a unit bid price for a specified work item, the Contractor will be paid that amount for the completed and accepted work.

In the event of discrepancies between unit prices and unit price extensions listed in bidder's proposal, unit prices shall govern.

05 SUBMISSION OF BIDS

Interested bidders shall only submit bids on IMPACS. All required documents must be submitted on IMPACS for the bid to be opened. These documents include: the Bid Submittal Authorization Form, acknowledgment of all issued addenda, and the Bid Bond as specified in Section 06. The bid itself will be entered and calculated via the 'Items' feature within IMPACS. All bids must be submitted with any modifications prior to the time and date noted for bid submission. A legally authorized representative of the bidder shall sign the bid.

06 BID SECURITY

Bidder shall provide a Bid Bond (Proposal Guarantee, *Document EE*) in the form of a cashier's check, certified check, or Surety Bond for the project in the amount of ten percent (10%) of the base bid (no alternates included). Cashier's check or certified check must be delivered to the Hoover State Office Building at least 3 hours prior to bid closing. The Bid Bond shall be made payable to the Division and shall be forfeited and become the property of the Division if the successful bidder fails or refuses to enter into contract and furnish the Performance Bond within fourteen (14) calendar days after their proposal has been accepted. If the Bid Bond is not required to be forfeited, checks will be returned to the bidders.

07 WITHDRAWAL OF BIDS

Bids may be withdrawn any time prior to the scheduled closing time for receipt of bids; but no bid may be withdrawn for a period of thirty (30) calendar days thereafter.

08 EVALUATION OF BIDS AND AWARD OF CONTRACT

The Contract shall be awarded to the lowest responsible bidder as determined by the Division. In evaluating the bids, the Division may consider such factors as bid price and bidder qualifications outlined in Section 02, including whether the bidder currently has a contract in default with the Division. In comparing bid prices, the total bids of the various bidders shall be determined by applying the unit prices bid for each work item against the estimated work item quantities set forth in the proposal.

09 TAXES

Materials purchased for this construction contract let by the Division are exempt from sales and use tax, including local option taxes. This exemption applies only to materials that are components of the final project. The contractor and subcontractors will be issued a Sales Tax Exemption Certificate from the Division that is specific for this contract. A sample of this form is included in the appendix. Refer to Iowa Department of Revenue and Finance's website for additional information: https://tax.iowa.gov/iowa-contractors-guide

The bidder shall include in his proposal all other federal and state taxes required by law.

10 EXECUTION OF CONTRACT

The bidder to whom the contract is awarded will be required to execute the Contract, obtain the appropriate insurance coverage and the Performance Bond, provide their Iowa Department of Inspections, Appeals & Licensing Registration Number, and complete the provided Construction Progress Schedule within fourteen (14) calendar days from the date when Notice-of-Award is delivered to the Bidder. The necessary Contract, Performance Bond, and Construction Progress Schedule forms shall accompany the Notice-of-Award. In case of failure of the Bidder to execute the Contract, the Division shall have the option to consider the Bidder in default, in which case the Bid Bond accompanying the proposal shall become the property of the Division.

The Division, within fourteen (14) days of receipt of acceptable proof of insurance coverage, Performance Bond, and Contract, signed by the party to whom the Contract was awarded, shall sign the Contract and return to such party an executed copy of the Contract. Should the Division not execute the Contract within such period, the Bidder may, with written notice, withdraw the signed Contract. Such notice of withdrawal shall be effective upon receipt of the notice by the Division.

The Division shall review the submitted Construction Progress Schedule, and work with the Contractor to adjust the schedule if it is deemed necessary. The Notice-to-Proceed shall be issued by the Division within five (5) days of the execution of the Contract, provided that the Construction Progress Schedule has been accepted by the Division. Should there be additional time required to make adjustments to the Construction Progress Schedule, the time to issue the Notice-to-Proceed may be extended to allow for this. Should there be any other reason why the Notice-to-Proceed cannot be issued within such period, the time may be extended by mutual agreement between the Division and Contractor. If the Notice-to-Proceed has not been issued within a thirty (30) day period, or within a greater period mutually agreed upon, the Contractor may terminate the Contract without further liability on the part of either party.

The Contract when executed shall be deemed to include the entire agreement between the parties; the Contractor shall not claim any modifications resulting from representation or promise made by representatives of the Division or other persons.

11 QUANTITIES

Estimated quantities shown on the proposal form are provided for the Contractor's information and for comparative purposes in awarding a construction contract. Such quantities are intended to represent the work shown on the Plans, measured as defined in the Construction Specifications. However, said quantities are only estimates and are subject to increases and/or decreases during construction of the project.

12 QUESTIONS AND ADDENDA

If any person contemplating submitting a bid for the proposed work, material or equipment is in doubt as to the true meaning of any part of the Plans, Construction Specifications, or other Contract Documents, that person may request an interpretation thereof. The person submitting the request will be responsible for its prompt delivery.

Questions concerning interpretation or intent of the Plans and Construction Specifications should be made in writing and directed to the Engineer, with the Division copied on the correspondence, as specified in the Notice-to-Bidders. All other questions concerning Contract Documents should be addressed to Tracy Blocker, Division, tracy.Blocker@iowaagriculture.gov or 515-344-6279.

Any oral interpretation given will be valid only if confirmed by written addendum. Information obtained from an officer, agent, or employee of the Division shall not affect the risks or obligations assumed by the Contractor or relieve them from fulfilling any of the conditions of the Contract. All interpretation requests should be addressed in writing and received no later than the date stipulated in the Notice-to-Bidders so that responses may be included in an Addendum prior to bid opening.

The Division reserves the right to revise or amend the Bid Documents prior to the date set for receipt of bids. Such revisions and amendments, if any, will be announced by an addendum or addenda to the Bid Documents. Copies of such addenda will be furnished to all plan holders. **Bidders are required to acknowledge receipt of all addenda by listing such addenda in the Proposal and Schedule of Prices (Document CC)**, and to submit the form on IMPACS prior to the date and time of the bid opening.

13 PRECONSTRUCTION CONFERENCE

Following the award of Contract, and prior to beginning construction, the Contractor will be required to attend a preconstruction meeting at a mutual time and place designated by the Division. This Preconstruction Conference will be held within seven (7) days prior to the Construction Start Date identified on the approved Construction Progress Schedule, or earlier if mutually agreed upon by Division, Contractor, and Engineer. No work may commence on site prior to the Preconstruction Conference. If the Contractor plans to move the Construction Start Date to a date earlier than previously agreed upon in the Construction Progress Schedule, this shall be communicated to the Division in a timely manner to allow for scheduling of the Preconstruction Conference. Should there be a reason why the construction work on site cannot commence by the agreed upon Construction Start Date, the schedule may be adjusted by mutual agreement between the Division and Contractor, as described in the General Conditions (*Document FF, Paragraph 3-21*).

See also Document FF Paragraph 3-01.

14 SUMMARY OF BID SUBMITTAL REQUIREMENTS

Before submitting a bid, be certain that all documents have been completed properly. Failure to complete and sign all documents and to comply with the requirements listed below can cause the bid not to be read.

A. Bid Security

The bid security must be in the minimum amount of ten percent (10%) of the total base bid amount. Bid security can be submitted in one of two ways:

1. SURETY BOND uploaded to IMPACS- *(Executed by a corporation authorized to contract as Surety in the State of Iowa - Use Document EE attached),* ***OR;***
1. CERTIFIED CHECK OR CASHIER'S CHECK delivered to IDALS- *(Drawn on a bank in the State of Iowa, or a bank chartered under the laws of the United States)*

Bidders choosing to submit a surety bond will be required to complete and submit the form included in Document EE of the bid package. This completed form must be submitted in IMPACS as part of the full proposal. Bidders who do not complete the form in full or do not submit the completed form in IMPACS will be disqualified from the bidding process.

Bidders choosing to submit a certified check or cashier's check will be required to upload a statement in IMPACS indicating intent to submit either a certified check or cashier's check. The check must be physically delivered to IDALS no later than three hours prior to the bid deadline. The bidder will be solely responsible for ensuring this deadline is satisfied. Failure to satisfy all these conditions will result in disqualification of the bid in question.

B. Bid Documents

The following items from the Proposal and Schedule of Prices (Document CC) shall be completed and signed:

1. IMPACS 'Items' from the Proposal and Schedule of Prices
    a. Items from the Schedule of Prices shall be submitted under 'Items' in IMPACS to include unit prices with the total bid amount.
2. Affidavit notarizing signature of bidder
    a. IMPACS question for affidavit signature shall be submitted prior to specified bid opening date and time.
3. Acknowledgement of Addenda
    a. IMPACS question for addenda shall be submitted prior to specified bid opening date and time.

THE BID CANNOT BE READ IF ANY OF THESE DOCUMENTS ARE OMITTED OR ARE NOT PROPERLY COMPLETED.

NOTE: ALL BID DOCUMENTS MUST BE SUBMITTED AS PRINTED. NO ALTERATIONS, ADDITIONS, OR DELETIONS ARE PERMITTED.

END OF DOCUMENT BB

Time and Date for Bid Submissions: 3:00:00 PM, 10/27/2026
BIDDER LOGIN –
https://solutions.sciquest.com/apps/Router/SupplierLogin?CustOrg=DASIowa

Time and Date of Bid Opening: 3:00 PM, October 27, 2026

Bid Opening TEAMS: +1 469-998-7627 code 910454647#

Project Description and Location: Cla953734C Nutrient Reduction Wetland Project
Section 34, Township 95 North, Range 37 West
Clay County, Iowa

PROPOSAL AND SCHEDULE OF PRICES

Proposal of _____
(PRINT Name of Bidder: COMPANY & CONTACT)

Located at _____
(FULL Address)

(_____) _____
(Telephone Number)

Amount of Proposal Guarantee	Description of Work	Specified Completion Date	Liquidated Damages
10% of Base Bid	All Work Except Seeding	November 15, 2027	$175.00 Per Day
	Seeding - Buffer Seeding – Structure	December 15, 2027 December 15, 2027	$125.00 Per Day
	Seeding must be done within the respective seeding period		

The undersigned hereby agrees, if awarded the contract, to execute the proposed contract and to furnish satisfactory Performance Bond in an amount not less than one hundred percent (100%) of the contract award within fourteen (14) days from the date when Notice-of-Award is received, and to provide all supervision, labor, materials, and equipment required to complete the project designated above, for the prices hereinafter set forth, in strict compliance with the Contract Documents prepared by the Division.

Further, the parties agree and acknowledge as follows:

- The amount of loss or damages likely to be incurred by Division are uncertain and said loss is incapable or very difficult to quantify and estimate;
- The amount specified for liquidated damages herein bear a reasonable relationship to, and are not plainly or grossly disproportionate to, the probable loss likely to be incurred by Division in connection with any delay on part of the Contractor;
- The amount of liquidated damages fixed herein bears a reasonable relationship to Division's anticipated losses and/or actual losses;
- The amount of liquidated damages herein fairly approximates Division's loss at the time of making of this Agreement;
- The amount of liquidated damages fixed herein are fair and reasonable and it approximates to the extent possible the actual loss to Division as a result of any delay on the part of Contractor; and
- Division and Contractor are sophisticated parties and negotiated this Agreement at arm's length.

Now therefore, in consideration of the mutual obligations set forth herein, the receipt and sufficiency of which is hereby acknowledged, the parties agree as follows:

- Contractor will commence the work after the Preconstruction Conference and by the Construction Start Date approved by Division in the Construction Progress Schedule.
- Contractor will complete the work within the specified time period identified in the contract, or as amended, or be responsible for liquidated damages per day as set forth in the above table.
- The liquidated damages may be withheld from payments made to the Contractor by the Division upon written notice that liquidated damages have begun to accrue, and such damages are in addition to other remedies available as provided for in this contract and applicable law.

A Proposal Guarantee in the amount stipulated herein is included with this proposal, to be forfeited to the Division, if the undersigned fails or refuses to execute the contract and furnish satisfactory Performance Bond, if awarded the contract.

By _____
(Signed)

_____
(PRINT NAME)

_____
(Title) (Date)

In executing this proposal, Bidder acknowledges receipt of Addendum Number _____ dated _____

In executing this proposal, Bidder acknowledges receipt of Addendum Number _____ dated _____

In executing this proposal, Bidder acknowledges receipt of Addendum Number _____ dated _____

THE FOLLOWING AFFIDAVIT MUST BE COMPLETED AND NOTARIZED, OR THIS BID WILL BE REJECTED

AFFIDAVIT

The signatory, being duly sworn, does depose and say that the undersigned is an authorized representative of:

_____
(Name of Firm)

Located at _____

hereinafter referred to as "Bidder" and does hereby affirm to have personal knowledge that said Bidder has thoroughly examined the Contract Documents, carefully prepared the Proposal and Schedule of Prices form, and has checked the same in detail before submitting; and that said Bidder, or the agents, officers, or employees thereof, have not, either directly or indirectly, entered into any agreement, participated in any collusion or fraud, or otherwise taken any action in restraint of free competitive bidding in connection with this bid.

_____
(Signed)

_____
(PRINT name)

Subscribed and sworn to before me this _____ day

of _____, 20____

_____
(Signed, Notary)

My Commission Expires _____, 20_____

Must include notary stamp

SCHEDULE OF PRICES

Cla953734C Project Contract No. 26-11 Section 34, Township 95 North, Range 37 West, Clay County, Iowa

Name of Bidder:

IMPACS Item No.	Item No.	Work or Material	Estimated Quantity	Unit	Unit Price	Total
1.1	1	Site Stripping & Preparation	1	LS		
	2	Crop Damage				
1.2	3	Structure & Channel Seeding	2	AC		
1.3	4	Buffer Seeding	13	AC		
1.4	5	Mobilization and Demobilization	1	LS		
1.5	6	Drain Tile Investigation and Removal	6	HR		
1.6	7	Steel Sheet Piling	2,523	SF		
1.7	8	Excavation (General)	10,944	CY		
1.8	9	Earthfill (General)	1,210	CY		
1.9	10	Earthfill (General Dam)	2,283	CY		
1.1	11	Earthfill (Dam Core)	767	CY		
1.11	12	Drainfill, Fine	23	CY		
1.12	13	Topsoil Strip, Salvage, and Respread	3,073	CY		
1.13	14	12" Dia. Reinforced Concrete Pipe	16	LF		
1.14	15	12" Dia. Reinforced Concrete Pipe (Gasketed)	136	LF		
1.15	16	30" Dia. Reinforced Concrete Pipe	805	LF		
1.16	17	Modified SW-402 Water Control Structure	1	EA		
1.17	18	12" Dia. Reinforced Concrete Apron, Footing, Bar Guard	1	EA		
1.18	19	30" Dia. Reinforced Concrete Apron, Footing, Bar Guard	1	EA		
1.19	20	6" Dia. Corrugated HDPE Pipe (Single-Wall; Perforated)	335	LF		
1.2	21	6" Dia. Corrugated HDPE Pipe (Single-Wall; Non-Perforated)	205	LF		
1.21	22	Stoplog Storage Structure	1	EA		
1.22	23	Outlet Riser Structure	1	EA		
1.23	24	Anti-Seep Collars	2	EA		
1.24	25	Rip Rap (Class E)	383	TN		
1.25	26	Grout for Rip Rap	46	CY		

***IMPACS will not accept an amount less than 1. Enter a unit price for 1 unit, and the bid tabulation will be adjusted based on the engineer's estimated quantity.**

TOTAL BASE BID……$_____

Worksheet purposes only. Bids will only be accepted through the on-line Iowa Management of Procurement & Contracts System (IMPACS).

To register and learn about IMPACS, go to: https://solutions.sciquest.com/apps/Router/SupplierLogin?CustOrg=DASIowa

END OF DOCUMENT CC

State of Iowa
Iowa Department of Agriculture and Land Stewardship
DIVISION OF SOIL CONSERVATION AND WATER QUALITY

THIS AGREEMENT, made this _____ day of _____, 20_____, by and between the State of Iowa, acting through:

Iowa Department of Agriculture and Land Stewardship
Division of Soil Conservation and Water Quality

hereinafter called the ***DIVISION,*** and

_____
(Name of Company)

_____
(Address)

_____
(City, State, Zip)

hereinafter called the ***CONTRACTOR.***

WITNESSETH: that the ***DIVISION*** agrees to pay the ***CONTRACTOR*** the contract price provided herein for the fulfillment of the work and performance of the covenants set forth herein, and the *CONTRACTOR* agrees to commence and complete the project described as follows:

Nutrient Reduction Wetland Project Construction Contract
Section 34, Township 95 North, Range 37 West, Clay County, Iowa
Project ID: Cla953734C
Bid No. 26-11

for the sum of _____ _____/100 Dollars ($_____.__) and all extra work in connection therewith as modified by approved Change Orders and Amendments, all in accordance with the terms and conditions herein contained; and to furnish at the ***CONTRACTOR'S*** own proper cost and expense, all materials, equipment, supervision, labor, insurance, and other accessories and services necessary to construct and complete, in a workmanlike manner, ready for continuous operation, the above-mentioned project. The work shall be performed in accordance with the requirements and provisions of the following documents, all of which are made a part hereof and collectively evidence and constitute the contract:

1. Notice-to-Bidders *(Document AA)*
2. Instructions to Bidders *(Document BB)*
3. Proposal and Schedule of Prices *(Document CC)*
4. This Instrument – Construction Contract *(Document DD)*
5. General Conditions *(Document FF)*
6. Special Conditions *(Document GG)*
7. Approved Change Orders *(Document HH)*
8. Approved Construction Contract Amendments *(Document II)*
9. Construction Specifications
10. Drawings, Sheet Numbers 0
11. Notice-of-Award *(Document LL)*
12. Construction Progress Schedule *(Document JJ)*
13. Notice-to-Proceed *(Document MM)*
14. Performance Bond *(Document NN)*
15. Addenda (when applicable)

The ***CONTRACTOR*** shall complete the Construction Progress Schedule (*Document JJ*) form provided within fourteen (14) days of the date that the Notice-of-Award is received. Should there be any reason why the Construction Progress Schedule

needs adjustment, those changes may be made by mutual agreement between the ***DIVISION*** and the ***CONTRACTOR*** as set forth in Paragraph 3-21 of Document FF. The Notice-to-Proceed will be issued within five (5) days of the execution of Contract, provided that the Construction Progress Schedule is approved by Division.

The ***CONTRACTOR*** shall schedule and attend a Preconstruction Conference with the ***DIVISION*** and the ***ENGINEER***. The Preconstruction Conference shall be held within seven (7) days prior to the Construction Start Date specified in the accepted Construction Progress Schedule, or earlier by mutual agreement. No work may commence on site prior to the Preconstruction Conference. If the ***CONTRACTOR*** plans to adjust the Construction Start Date, this shall be communicated to the ***DIVISION*** as soon as possible to allow scheduling of the Preconstruction Conference.

The ***CONTRACTOR*** hereby agrees to complete the work within the contract period, or to pay liquidated damages. All work except for seeding must be completed by November 15, 2027, the buffer seeding must be completed by 12/15/2027 and the structure seeding must be completed by 12/15/2027 and within the respective seeding period indicated in the specifications.

It is understood that the ***CONTRACTOR*** consents to the jurisdiction of the courts of Iowa to hear, determine and render judgments as to any controversy arising hereunder, and that this contract shall be governed by, and construed according to the laws of the State of Iowa.

IN WITNESS WHEREOF, the parties hereto have executed this Agreement, in the day and year first aforementioned.

FOR THE DIVISION

Grant D. Menke, Deputy Secretary
Iowa Department of Agriculture and Land Stewardship

(Date)

FOR THE CONTRACTOR

(Company Representative)

(Date)

(Name of Company)

(Address of Company)

(City, State, Zip Code)

Seal if by a corporation

Identification Number
Soc. Sec. No. _____
or
Fed. ID No. _____

Iowa Department of Inspections, Appeals & Licensing
Public Registration No. _____

END OF DOCUMENT DD

State of Iowa
Iowa Department of Agriculture and Land Stewardship
DIVISION OF SOIL CONSERVATION AND WATER QUALITY

KNOW ALL PERSONS BY THESE PRESENTS:

That we, _____

of _____as **PRINCIPAL,**

and _____

of _____as **SURETY(S),**

are hereby held and firmly bound unto the State of Iowa in the penal sum of

_____ _____ /100 Dollars ($_____.____)

for the payment, whereof, the said **PRINCIPAL** and **SURETY(S)** bind themselves, their heirs, executors, administrators, successors and assigns, jointly and severally, firmly by these presents.

The conditions of this obligation are such that whereas the **PRINCIPAL** is herewith submitting to the Iowa Department of Agriculture and Land Stewardship, Division of Soil Conservation and Water Quality, hereinafter called the **DIVISION** its sealed contract for the following:

Nutrient Reduction Wetland Project
Section 34, Township 95 North, Range 37 West, Clay County, Iowa
Project ID: Cla953734C
Bid No. 26-11

NOW THEREFORE,
the conditions of this obligation are such that, if said proposal is rejected by the **DIVISION**, or if said proposal is accepted by the **DIVISION** and the **PRINCIPAL** shall enter into a contract in the form specified by the **DIVISION** in accordance with the terms of the Proposal and Schedule of Prices (Document CC) and shall furnish a bond for the faithful performance of said contract in the form specified by the **DIVISION**, this obligation shall be null and void. Otherwise, it shall remain in full force and effect.

In the event that the said proposal is accepted by the **DIVISION** and the **PRINCIPAL** fails to enter into the contract as defined herein or fails to furnish the performance bond as noted above, within fourteen (14) days of the approval of the award, the **PRINCIPAL** and **SURETY(S)** agree to forfeit to the **DIVISION** the penal sum herein mentioned, it being understood that the liability of the SURETY(S) shall in no event exceed the penal sum or this obligation.

IN WITNESS WHEREOF,
the above bounden parties have executed this instrument under their several seals this _____ day of _____, 20_____, the name and corporate seal of each party being hereto affixed and these presents duly signed by its undersigned representative pursuant to authority of its governing body.

PRINCIPAL	**SURETY**
By_____	By _____
_____	_____
	Print Name:
_____	

If a partnership, all partners must sign.

END OF DOCUMENT EE

GENERAL CONDITIONS

SECTIONS

SECTION 1 - DEFINITIONS
SECTION 2 - PLANS, SPECIFICATIONS AND RELATED DATA
SECTION 3 - ENGINEER-DIVISION-CONTRACTOR RELATIONS
SECTION 4 - SCOPE OF WORK
SECTION 5 - MATERIALS AND WORKMANSHIP
SECTION 6 - LEGAL RELATIONS AND RESPONSIBILITY TO PUBLIC
SECTION 7 - MEASUREMENT AND PAYMENT

TABLE OF CONTENTS

SECTION 1 - DEFINITIONS FF-4
1-01 GENERAL: FF-4
1-02 CONTRACT DOCUMENTS: FF-4
1-03 DIVISION: FF-4
1-04 ENGINEER: FF-4
1-05 WORK OR PROJECT: FF-4
1-06 SPECIFICATIONS: FF-4
1-07 SPECIAL CONDITIONS: FF-4
1-08 PLANS: FF-4
1-09 BIDDER: FF-4
1-10 PROPOSAL: FF-4
1-11 PROPOSAL GUARANTEE: FF-5
1-12 CONTRACT: FF-5
1-13 AMENDMENT: FF-5
1-14 CHANGE ORDER: FF-5
1-15 CONTRACTOR: FF-5
1-16 SUBCONTRACTOR: FF-5
1-17 PERFORMANCE BOND: FF-5
1-18 SURETY: FF-5
1-19 WRITTEN NOTICE: FF-5
1-20 GOVERNMENTAL AGENCY: FF-5
1-21 ACT OF GOD: FF-6
1-22 DAYS: FF-6
1-23 WORKING DAYS: FF-6
1-24 CONSTRUCTION START DATE: FF-6
1-25 TIME OF COMPLETION: FF-6
1-26 DEFAULT: FF-6
1-27 ALTERNATES: FF-6
1-28 COMMON TERMS: FF-6
1-29 ABBREVIATIONS: FF-7

SECTION 2 - PLANS, SPECIFICATIONS AND RELATED DATA FF-7
2-01 INTENT OF PLANS AND SPECIFICATIONS: FF-7
2-02 CONFLICT: FF-7
2-03 DISCREPANCIES IN PLANS: FF-7
2-04 ADEQUACY OF PLANS AND SPECIFICATIONS: FF-8
2-05 PLANS AND SPECIFICATIONS AT JOB SITE: FF-8
2-06 DIMENSIONS: FF-8
SECTION 3 - ENGINEER-DIVISION-CONTRACTOR RELATIONS FF-8
3-01 PROJECT MEETINGS: FF-8
3-02 SUSPENSION OF WORK BY DIVISION OR ENGINEER: FF-10
3-03 SUSPENSION OF WORK BY DIVISION: FF-10
3-04 SUSPENSION OF WORK BY CONTRACTOR: FF-10
3-05 EXAMINATION OF COMPLETED WORK: FF-10
3-06 CONTRACTOR'S SUPERINTENDENCE: FF-10
3-07 CONTRACTOR'S EMPLOYEES: FF-10
3-08 ENGINEER: FF-11
3-09 DIVISION LAND RIGHTS: FF-11
3-10 CONTRACTOR LAND RIGHTS: FF-11
3-11 ENTRY ON PROPERTY: FF-11
3-12 REMOVAL OF CONSTRUCTION EQUIPMENT, TOOLS AND SUPPLIES: FF-11
3-13 DIVISION'S RIGHT TO CORRECT DEFICIENCIES: FF-11
3-14 DIVISION'S RIGHT TO TERMINATE CONTRACT AND COMPLETE THE WORK: FF-11
3-15 TERMINATION DUE TO LACK OF FUNDS OR CHANGE IN LAW: FF-12
3-16 CONTRACTOR'S RIGHT TO TERMINATE CONTRACT: FF-12
3-17 SEPARATE CONTRACTS: FF-12
3-18 SUBCONTRACTS: FF-12
3-19 WORK DURING AN EMERGENCY: FF-12
3-20 ORAL AGREEMENTS: FF-13
3-21 CONSTRUCTION SCHEDULE: FF-13
3-22 DELAYS AND EXTENSION OF CONTRACT TIME: FF-13
3-23 SUBMITTALS: FF-14
3-24 SEVERABILITY: FF-14
SECTION 4 - SCOPE OF WORK FF-14
4-01 ADDITIONAL INSTRUCTIONS: FF-14
4-02 INCREASED OR DECREASED QUANTITIES OF BID WORK: FF-14
4-03 EXTRA WORK: FF-14
4-04 CHANGED CONDITIONS: FF-15
4-05 SALVAGE: FF-15
4-06 CLEANUP: FF-15
SECTION 5 - MATERIALS AND WORKMANSHIP FF-15
5-01 QUALITY OF EQUIPMENT AND MATERIALS: FF-15
5-02 MATERIALS FURNISHED BY DIVISION: FF-16

5-03 MATERIALS FURNISHED BY CONTRACTOR: FF-16
5-04 TESTING SERVICES: FF-17
5-05 STORAGE OF MATERIALS: FF-17
5-06 REJECTED WORK AND MATERIALS: FF-18
5-07 MANUFACTURER'S DIRECTIONS: FF-18
5-08 PATENTS: FF-18
5-09 GUARANTEE: FF-18
5-10 UNFAVORABLE WEATHER CONDITIONS: FF-19
5-11 BOND: FF-19
5-12 PREFERENCE FOR LABOR AND MATERIAL: FF-19
SECTION 6 - LEGAL RELATIONS AND RESPONSIBILITY TO PUBLIC FF-19
6-01 INSURANCE AND RELATED PROVISIONS: FF-19
6-02 USE OF PREMISES: FF-21
6-03 CONFINEMENT OF OPERATIONS: FF-21
6-04 SAFETY: FF-21
6-05 FAILURE TO PAY FOR LABOR AND MATERIALS: FF-22
6-06 MOVING OF PUBLIC AND PRIVATE UTILITIES: FF-22
6-07 PROTECTION OF PUBLIC AND PRIVATE UTILITIES: FF-22
6-08 DAMAGE TO EXISTING PUBLIC AND PRIVATE PROPERTIES: FF-22
6-09 MAINTENANCE OF TRAFFIC: FF-22
6-10 USE AND OCCUPANCY PRIOR TO COMPLETION OF CONTRACT: FF-22
6-11 PERSONAL LIABILITY: FF-23
6-12 NO WAIVER OF LEGAL RIGHTS: FF-23
SECTION 7 - MEASUREMENT AND PAYMENT FF-23
7-01 MEASUREMENT: FF-23
7-02 SCOPE OF PAYMENT: FF-23
7-03 PAYMENT FOR EXTRA WORK: FF-23
7-04 PROGRESS PAYMENTS/RETAINED PERCENTAGE: FF-24
7-05 DIVISION'S ACTION ON AN APPROVED REQUEST FOR PAYMENT: FF-26
7-06 INTEREST ON UNPAID REQUESTS FOR PAYMENT: FF-26
7-07 PAYMENT FOR UNCORRECTED WORK: FF-26
7-08 PAYMENT FOR REJECTED WORK AND MATERIALS: FF-26
7-09 PAYMENT FOR WORK SUSPENDED BY DIVISION: FF-26
7-10 PAYMENT FOR WORK BY THE DIVISION: FF-26
7-11 PAYMENT FOR WORK BY DIVISION FOLLOWING DIVISION'S TERMINATION OF CONTRACT: FF-26
7-12 PAYMENT FOR WORK TERMINATED BY CONTRACTOR: FF-26
7-13 RELEASE OF LIENS: FF-26
7-14 FINAL ACCEPTANCE AND FINAL PAYMENT: FF-26
7-15 TERMINATION OF CONTRACTOR'S RESPONSIBILITY: FF-27
7-16 CORRECTION OF FAULTY WORK AFTER FINAL PAYMENT: FF-27
7-17 LIQUIDATED DAMAGES: FF-27
7-18 CUMULATIVE RIGHTS: FF-28

SECTION 1 - DEFINITIONS

1-01 GENERAL: In the interpretation and construction of these Contract Documents, or in any documents or instruments dealing with the work governed by these Contract Documents, the following words, terms and abbreviations, or pronouns in place of them, shall each be construed as defined below. The paragraph headings or captions are for identification purposes only and do not limit or construe the contents of the paragraphs.

Omissions of words or phrases such as "the Contractor shall," "in conformance with," "shall be," "as noted on the Plans," "according to the Plans," "a," "an," "the," and "all" are intentional, and Contractor must supply omitted words and phrases by inference.

1-02 CONTRACT DOCUMENTS: Those documents listed in the Construction Contract *(Document DD)*, including all additions, deletions and modifications incorporated therein before the execution of the Contract. These documents are as follows:

1. Notice to Bidders *(Document AA)*.
2. Instructions to Bidders *(Document BB)*.
3. Proposal and Schedule of Prices *(Document CC)*.
4. Construction Contract *(Document DD)*.
5. This Instrument - General Conditions *(Document FF)*.
6. Special Conditions *(Document GG)*.
7. Approved Change Orders *(Document HH)*.
8. Approved Construction Contract Amendments (*Document II)*.
9. Construction Specifications.
10. Drawings, Sheet Numbers 0.
11. Notice-of-Award *(Document LL)*.
12. Construction Progress Schedule *(Document JJ)*.
13. Notice-to-Proceed *(Document MM)*.
14. Performance Bond *(NN)*.
15. Addenda (when applicable)

1-03 DIVISION: Division of Soil Conservation and Water Quality, Iowa Department of Agriculture and Land Stewardship, State of Iowa.

1-04 ENGINEER: As defined in Special Conditions.

1-05 WORK OR PROJECT: Work to be done and equipment, supplies, and materials to be furnished under the Contract, General Conditions, Special Conditions, Construction Specifications, Plans, Addenda, and Modifications to these Contract Documents issued subsequent to their initial printing, unless some other meaning is indicated by the context.

1-06 SPECIFICATIONS: The directions and requirements of the detailed Construction Specifications as contained herein, as supplemented by such detailed specification requirements as may be provided, pertaining to the manner of performing the work or the quantities and quality of materials to be furnished under the Contract.

1-07 SPECIAL CONDITIONS: The Special Conditions are contract requirements peculiar to the project which are not otherwise thoroughly or satisfactorily detailed and set forth in these General Conditions.

1-08 PLANS: The official drawings, profiles, typical cross sections and supplemental drawings, or reproductions thereof, approved by Engineer, which show the location, character, dimensions and details of work to be performed. Any and all such drawings, as listed in the Special Conditions, are to be considered as a part of the Contract Documents whether attached to the Contract Documents or separate therefrom.

1-09 BIDDER: An individual, firm, co-partnership or corporation, or combination thereof, submitting a Proposal for the work contemplated and acting directly or through a duly authorized representative.

1-10 PROPOSAL: The written offer or copy thereof of a Bidder to perform the work described by the Contract Documents. This written offer shall be made out and submitted on the prescribed Proposal and Schedule of Prices *(Document CC)*, properly signed and guaranteed. A complete Proposal shall contain all of the properly completed and signed documents as described in Article 13 of the Instructions-to-Bidders *(Document BB)*.

1-11 PROPOSAL GUARANTEE: Bid Bond (*Document EE*) accompanying the Proposal submitted by the Bidder, as a guarantee that the Bidder shall enter into Contract with the Division for performance of the work and furnish required insurance forms and bond or bonds if the Contract is awarded to the Bidder, in accordance with the Instructions-to-Bidders *(Document BB)*.

1-12 CONTRACT: The written agreement (*Document DD*) covering the performance of the work described in the Contract Documents, including all signed Change Orders and Amendments thereto, and all general and special provisions pertaining to the work or materials therefor.

1-13 AMENDMENT: The written agreement covering the performance of changed work from the original Contract Documents which meets one or more of the following criteria:

1. The total cost of the Contract, at the time of Contract award, is increased or decreased by more than twenty percent (20%);
2. Any one major[1] Contract bid item is increased or decreased by more than twenty percent (20%);
3. The Contract construction completion date (for all work except seeding) or seeding completion date is revised;
4. Contractor requests full payment when ninety-five percent (95%) or more of the total Contract (as modified by signed Amendments and Change Orders) has been completed and approved for final acceptance by Division and the remaining Contract work cannot proceed (due to conditions beyond the control of Contractor) for a period of more than sixty (60) days;
5. Work outside the original scope of the Contract Documents is added;
6. Both parties agree an Amendment is necessary to address material changes to the original scope of the Contract.

[1]For criteria "2." above, a major item is defined as any bid item, with the exception of those listed exceptions or as designated in the Special Conditions as exceptions, for which Contractor's total bid price contained in the Proposal and Schedule of Prices (*Document CC*) amounts to ten percent (10%) or more of the cost of the original Contract award.

Only Amendments duly signed and executed by both Contractor and Division, with written consent of the Surety, constitute authorized modifications to the Contract.

1-14 CHANGE ORDER: A written order to Contractor, signed by Division, ordering a change in the work originally shown by the Contract Documents, which has been found necessary by the Division. Only Change Orders duly signed and executed by Division constitute authorized modifications of the Contract.

1-15 CONTRACTOR: The individual, firm, partnership or corporation, and any heirs, executors, administrators, successors or assigns, or the lawful agent of any such individual, firm, partnership, or corporation, or the Surety under the contract bond, constituting one of the principals to the Contract and undertaking to perform the work herein specified. Where any pronoun is used as referring to the word "Contractor" it shall mean Contractor as defined above.

1-16 SUBCONTRACTOR: Any person, firm, partnership or corporation who under a direct contract with Contractor acts for or on behalf of Contractor in executing any part of the Contract, but not including one who merely furnishes material.

1-17 PERFORMANCE BOND: The approved form of security furnished by Contractor and Contractor's Surety, as required in the Contract Documents *(Document NN)*, which shall be conditioned upon Contractor's and Contractor's Surety's promise to faithfully perform all provisions of the Contract and complete the work in accordance with the Contract Documents, including making full payment for labor and materials used in the work.

1-18 SURETY: The person, firm or corporation who executes Contractor's Performance Bond.

1-19 WRITTEN NOTICE: Written notice shall be considered served when delivered in person, via e-mail or sent by registered mail to the individual, firm, partnership or corporation, or to the last known business address of such individual, firm, partnership, or corporation known to the person who serves the notice. It shall be the duty of each party to advise the other parties to the Contract of any change in business address prior to completion of the Contract.

1-20 GOVERNMENTAL AGENCY: Any governmental unit having jurisdiction.

1-21 ACT OF GOD: Means an earthquake, flood, cyclone or other cataclysmic phenomenon of nature. Rain, wind, flood or any other natural phenomenon of normal intensity for the locality shall not be construed as an Act of God.

1-22 DAYS: Unless otherwise designated, days as used in the Contract Documents shall be understood to mean calendar days.

1-23 WORKING DAYS: Any day where weather conditions or other conditions allow Contractor to pursue any major item of work, excluding Sundays and holidays.

1-24 CONSTRUCTION START DATE: The Construction Start Date shall be specified on the Notice-to-Proceed after Division approval of the date specified in the Construction Progress Schedule (*Document JJ*).

1-25 TIME OF COMPLETION: Time of completion of all work involved in this project shall be as specified in the Special Conditions. See also Paragraph 3-21.

1-26 DEFAULT: Means the failure to perform the contractual obligations within the timescales detailed in the Contract. A Contractor will not be considered to be in Default if the Contractor has been granted a No-Fault Extension as specified in Paragraph 3-22 and complies with the contractual obligations within the amended timescale.

1-27 ALTERNATES: Alternates are defined as alternate products, materials, equipment, installations or systems for the work, which may, at Division's option and under terms established by the Contract Documents, be selected and recorded in the Contract to either supplement or displace corresponding basic requirements of the Plans and Construction Specifications. Alternates may or may not substantially change the scope and general character of the work, and should not be confused with "allowances", "unit prices", "change orders", "substitutions", and other similar provisions.

1-28 COMMON TERMS: Certain terms are used in the Contract Documents and are defined generally in this Section. Definitions in this Section are not necessarily either complete or exclusive but are general in nature and intended to add clarification where more explicit definitions are not stated in the Construction Specifications.

A. ***Indicated:*** The term “indicated” is a cross-reference to details, notes, or schedules on the Plans; to other paragraphs or schedules in the Construction Specifications; and to similar requirements in the Contract Documents. Where terms such as “shown,” “noted,” “scheduled,” and “specified” are used in lieu of “indicated,” for the purpose of helping the reader locate cross-reference, and no limitation of location is intended except as specifically noted.

B. ***Directed, Requested, etc.:*** Where not otherwise further defined, terms such as “directed,” “requested,” “authorized,” “selected,” “approved,” “required,” “accepted,” and “permitted”, mean “directed by the Division or Engineer,” etc. However, no such implied meaning shall be interpreted to extend Division's or Engineer's responsibility to Contractor's responsibility for construction supervision, safety, or means and methods of construction.

C. ***Approve:*** Where used in conjunction with Division's or Engineer's response to submittals, requests, applications, inquiries, reports and claims by Contractor, the meaning of the term “approved” will be held to limitations of Division's or Engineer's responsibilities and duties as specified in General and Special Conditions. In no event shall “approval” by Division or Engineer be interpreted as releasing Contractor from responsibilities to fulfill requirements of the Contract Documents.

D. ***Furnish:*** Except as otherwise or further defined, the term “furnish” shall mean to supply and deliver to project site, ready for unloading, unpacking, assembly, installation, etc., as applicable in each instance.

E. ***Install:*** Except as otherwise or further defined in greater detail, the term “install” is used to describe operations at project site including unloading, unpacking, assembly, erection, placing, anchoring, applying, working to dimension, finishing, curing, protecting, cleaning and similar operations, as applicable in each instance.

F. ***Provide:*** Except as otherwise or further defined in greater detail, the term “provide” means to furnish and install, complete and ready for intended use, as applicable in each instance.

G. ***Installer:*** The entity (person or firm) engaged by Contractor or its subcontractor or sub-subcontractor for the performance of a particular unit of work at the project site, including installation, erection, application and similar required operations. Installers shall be experts in operations in which they are engaged to perform.

H. ***Testing Laboratory:*** An independent entity engaged to perform specific inspections or tests of the work, either at project site or elsewhere, and to report and (if required) interpret results of those inspections or tests.

1-29 ABBREVIATIONS: The following abbreviations as referenced in the Contract Documents are defined to mean the associations noted below:

SWCD	Soil and Water Conservation District
IDALS	Iowa Department of Agriculture and Land Stewardship
NRCS	Natural Resources Conservation Service, United States Department of Agriculture
FSA	Farm Service Agency, United States Department of Agriculture
IMPACS	Iowa Management of Procurement and Contracts System

SECTION 2 - PLANS, SPECIFICATIONS AND RELATED DATA

2-01 INTENT OF PLANS AND SPECIFICATIONS: The intent of the Contract Documents is that Contractor furnishes all supervision, labor, materials, equipment, and transportation necessary for proper execution of the work unless otherwise specifically noted. Contractor shall complete all work shown on the Plans and described in the Contract Documents and all incidental work considered necessary to complete the project in an acceptable manner, or to fully complete the work or improvement, ready for use, occupancy and operation by Division and/or Landowner.

Any minor work not specifically mentioned in the Contract Documents or shown on the Plans, but reasonably inferable as necessary for the proper completion of the work, shall be considered as being a part of and included in the Contract and shall be executed in a proper manner. Contractor shall not be entitled to extra or additional compensation for such work.

It is further the intention of the Contract Documents to set forth requirements of performance, type of equipment and structures, and standards of materials and construction, to require new material and equipment unless otherwise indicated, and to require complete performance of the work without specific reference to any minor component part. It is not intended, however, that materials or work not covered by or properly inferable from any heading, branch, class or trade of the Contract Documents be supplied unless expressly so noted. Materials or work described in words, which as applied have a well-known technical or trade meaning, shall be held to refer to such recognized standards.

Whenever any article, material, or equipment is defined in the Contract Documents by describing a proprietary product or by using the name of a manufacturer or vendor, the term "or equal," if not inserted shall be implied. The specific article, material, or equipment mentioned shall be understood as indicating the type, function, minimum standard of design, efficiency, and quality desired and shall not be construed in such manner as to exclude manufacturers' products of comparable quality as approved by Division or Engineer.

2-02 CONFLICT: In the event of conflict between the Plans, Construction Specifications, or other Contract Documents, the level of precedence shall be as provided below. In the event of conflict within a Contract Document, the most stringent provision of that Contract Document is intended and shall control.

A. Special Conditions over General Conditions.
B. Indicated dimensions over scaled dimensions.
C. Large scale details over small-scale details, Plans, and elevations.
D. Construction Specifications over Plans.
E. Addenda over Construction Specifications and Plans.
F. Approved Change Orders and Contract Amendments over prior Contract Documents to the extent of inconsistency with other Contract Documents.

2-03 DISCREPANCIES IN PLANS: Any discrepancies found between individual Contract Documents and site conditions, or any errors, omissions or ambiguities in the Contract Documents shall be immediately reported to the Division.

Questions as to meaning of the Contract Documents shall be interpreted by Division in consultation with Engineer. Division's decision shall be final and binding on all parties concerned. Division shall provide Contractor with such information as may be required to show revised or additional details of construction. Contractor shall not be allowed to take advantage of any errors or omissions in the Contract Documents. Division shall provide full information when errors or omissions are

discovered. Any work done by Contractor, after Contractor's discovery of such discrepancies, errors, or omissions and prior to a decision by Division, shall be at Contractor's risk.

2-04 ADEQUACY OF PLANS AND SPECIFICATIONS: Responsibility for adequacy of the design and sufficiency of the Contract Documents shall be borne by the Division. The complete requirements of the work to be performed under the Contract shall be set forth in the Contract Documents supplied by Division.

2-05 PLANS AND SPECIFICATIONS AT JOB SITE: One complete record set of all Contract Documents shall be maintained by Contractor at the job site and shall be available to Division at all times. Contractor shall maintain a set of the Plans and shop drawings in clean, undamaged condition, with mark-up and actual installation which vary from the work as originally shown. Record documents shall not be used for construction purposes and shall be protected from deterioration. Contractor shall provide access to record documents for Division's reference during all working hours.

Specific requirements for record documents are indicated below. Other requirements are indicated in the Construction Specifications.

A. **RECORD PLAN**

1. Mark whichever drawing is most capable of showing "field" condition fully and accurately; however, where shop drawings are used for mark-up, record a cross-reference at corresponding location on working drawings.
2. Mark up new information, which is recognized to be of importance to Division, but was for some reason not shown on either contract drawings or shop drawings.
3. Give particular attention to concealed work which would be difficult to measure and record at a later date.
4. Note related change-order numbers where applicable.

B. **RECORD CONSTRUCTION SPECIFICATIONS**

1. Give particular attention to substitutions, selection of options, and similar information on work where it is concealed or cannot otherwise be readily discerned at a later date by direct observation.
2. Note related record drawing information and product data, where applicable.

C. **RECORD SURVEY NOTES**

Maintain a minimum of two copies of all construction survey notes continuously throughout project completion. One copy of all such notes shall be furnished to the Division immediately (daily) as field construction surveys are completed by Contractor-retained survey personnel. A copy of these notes shall be preserved by Contractor and submitted to Division along with other record document submittals prior to final project acceptance.

2-06 DIMENSIONS: Figured dimensions on the Plans shall be used in preference to scaling the drawings. Where the work of Contractor is affected by finish dimensions or manufacturer's equipment, these shall be determined by Contractor at the site, and Contractor shall assume responsibility therefor.

SECTION 3 - ENGINEER-DIVISION-CONTRACTOR RELATIONS

3-01 PROJECT MEETINGS: Except as provided below for the Preconstruction Conference, Progress Meetings may be held as necessary to address specific problems, issues or questions. Division shall coordinate with Engineer and Contractor to establish acceptable schedules for the Preconstruction Conference, and any Progress Meetings. All project meetings shall be held at the project site unless a different location is identified and agreed upon in advance by the parties.

The minimum Project Meeting and Preconstruction Conference agenda requirements are detailed below. The Contractor shall also meet the attendance requirements outlined below.

A. **MINIMUM AGENDA**

1. Review current project schedule and identify problems which impede planned progress.

2. Develop corrective measures and procedures to regain planned schedule.
3. Identify anticipated quantity differences in any pay item, e.g., shortages, overruns, etc.
4. Identify and address any Landowner concerns made known to Division, Engineer, or Contractor.
5. Complete other current business.
6. Review monthly pay estimate as applicable.

B. **ATTENDANCE**

1. To the maximum extent practicable, the same person or persons shall be assigned to represent Contractor at the project meetings held throughout progress of the work. Contractor's Superintendent shall be present at all meetings. In the Superintendent's absence, Contractor shall provide a representative with the required authority to commit Contractor to any decisions made at the meeting.
2. Subcontractors, material suppliers, and others may be invited to attend those project meetings in which their aspect of the work is involved.

C. **MINUTES**

1. Minutes of all meetings shall be compiled, published, and distributed by the Division. The Division shall furnish electronic copies of meeting minutes to Contractor, Engineer, and other attendees as applicable via E-mail. Recipients of copies may make and distribute other copies as necessary.
2. Unless published minutes are clarified in writing prior to the next scheduled meeting, they shall be accepted as properly stating the activities and decisions of the meeting. Persons wishing to amend or clarify published minutes shall reproduce and distribute copies of the supplemental information to all indicated recipients of the particular set of minutes. Clarifications and amendments to minutes shall be settled as priority portion of "old business" at the next regularly scheduled meeting.

D. **PRECONSTRUCTION CONFERENCE**

A Preconstruction Conference shall be held within seven (7) days prior to the Construction Start Date accepted in the Construction Progress Schedule, or earlier if mutually agreed upon by Division, Engineer, and Contractor. Prior to commencement of work at the site, the Notice-to-Proceed must be issued and the Preconstruction Conference must be held. The time and place of the Preconstruction Conference shall be mutually agreed upon by Division, Engineer, and Contractor. Contractor shall assure the attendance of an authorized representative of Contractor, and/or Contractor's Superintendent for the project. Division and Engineer shall also be in attendance. Division shall be responsible for advising other interested parties (e.g., landowners and governmental agencies) and requesting their attendance when their presence is deemed advisable by the Engineer or Division.

The following items, at a minimum, shall be discussed at the Preconstruction Conference:

1. Organizational arrangement of Contractor's forces and personnel, and those of subcontractors and materials suppliers
2. Channels and procedures for communication;
3. Construction schedule, including sequence of critical work;
4. Contract Documents, including distribution of required copies of original documents and revisions;
5. Processing of Shop Drawings, submittals and other data submitted to Engineer for review;
6. Processing of bulletins, field decisions, Change Orders, Contract Amendments, and Applications for Payment;
7. Rules and regulations governing performance of the work;
8. Temporary construction facilities and controls;
9. Procedures for safety and first aid, security, quality control, housekeeping, and related matters.

3-02 SUSPENSION OF WORK BY DIVISION OR ENGINEER: When, in the judgment of Division or Engineer, unfavorable weather or any other condition makes it impractical to secure first-class results in accordance with the Contract Documents, or Contractor fails to carry out the provisions of the Contract Documents or supply materials meeting the requirements of the Contract Documents, Division or Engineer may issue to Contractor a written order to suspend work on all or any part of the work. When conditions are again favorable for prosecution of the work, Division or Engineer shall issue to Contractor a written order to resume the suspended work. Orders to suspend work shall not be written for intermittent shutdowns due to weather condition unless the suspension of work is for an extended period of time. Contractor shall take every precaution to prevent any damage or unreasonable deterioration of the work during the time it is closed down.

Suspension of the work by Engineer shall not furnish any grounds for claims by Contractor for damages or extra compensation. The period of such suspension may be considered in determining the revised date for completion as hereinafter provided. Contractor shall not suspend work under the Contract, except as permitted in Paragraph 3-04, without the written order of Division or Engineer as stated in the preceding paragraph. Contractor shall be required to work a sufficient number of hours per day and days per week in order to complete the project on or before the completion date set forth in the Contract. Questions as to the desirability of discontinuing any portion of the work by reason of unfavorable weather conditions shall be determined by Division or Engineer.

3-03 SUSPENSION OF WORK BY DIVISION: Division may at any time suspend the work, or any part thereof, by giving a ten (10) day notice to Contractor in writing. The work shall be resumed by Contractor within ten (10) days after the date fixed in the written notice from Division to Contractor to do so.

If the work, or any part thereof, shall be stopped by the notice in writing aforesaid, and if Division does not give notice in writing to Contractor to resume work at a date within a year of the date fixed in the written notice to suspend, then Contractor may abandon that portion of the work so suspended, and Contractor shall be entitled to the estimates and payments for all work done on the portions so abandoned, if any. See also Paragraph 7-09.

If suspension of all or part of the work causes additional expense not due to the fault or negligence of Contractor, Division shall reimburse Contractor for the additional expense incurred due to suspension of the work. Claims for such compensation, with complete substantiating records, shall be filed with Division within ten (10) days after the date of order to resume work in order to receive consideration. This paragraph shall not be construed as entitling Contractor to compensation for delays due to inclement weather, failure to furnish additional Surety or Sureties specified herein, suspension made at the request of Contractor, or for any other delay provided for in the Contract Documents.

3-04 SUSPENSION OF WORK BY CONTRACTOR: Contractor may suspend work upon a ten (10) day written notice to Division and Engineer, for any of the following reasons:

1. If an order of any court or other public authority caused the work to be stopped or suspended for a period of ninety (90) days through no act or fault of Contractor or Contractor's employees.
2. If Division fails to act upon any Request for Payment, in the manner set forth in Paragraph 7-05, within thirty (30) days after the date on which Division receives Engineer approved Request for Payment (within sixty (60) days for the initial Request for Payment).

3-05 EXAMINATION OF COMPLETED WORK: At the request of Division or Engineer, Contractor at any time before acceptance of the work shall remove or uncover such portions of the finished work as may be directed. After examination, Contractor shall restore said portions of the work to the standard required by the Contract Documents. In the event work thus exposed or examined proves acceptable, the uncovering or removing, and the replacing of the covering or making good of the parts removed, shall be paid for as Extra Work in accordance with requirements of Paragraph 7-03. In the event work so exposed or examined proves unacceptable, the uncovering or removing, and the replacing of the covering or making good of the parts removed, shall be at Contractor's expense.

3-06 CONTRACTOR'S SUPERINTENDENCE: Contractor shall retain a qualified Superintendent to provide efficient supervision of the work covered by the Contract Documents, until its completion. The Superintendent shall have full authority to act on behalf of Contractor, and all directions given to the superintendent shall be considered given to Contractor.

3-07 CONTRACTOR'S EMPLOYEES: Incompetent, incorrigible, or otherwise objectionable employees shall be dismissed from the project by Contractor or Contractor's representative at the request of Division or Engineer, and such persons shall not be permitted to return to the project without the written consent of the objecting party.

A. Neither Contractor nor Subcontractors shall employ any person whose physical or mental condition is such that his or her employment could reasonably be expected to endanger said employee, Contractor, other employees, or any other person on the project.

B. Contractor ***shall not***:

1. Discharge from employment or refuse to hire any individual because of race, creed, color, sex, national origin, ancestry, religion, economic status, age, disabilities, experience or education, political opinions, or affiliations.
2. Discriminate against any individual in terms, conditions, or privileges of employment because of race, creed, color, sex, national origin, ancestry, religion, economic status, age, disabilities, experience or education, political opinions, or affiliations.

Contractor agrees to include clauses in any subcontracts entered into for work covered by the Contract Documents prohibiting the practices described in this Paragraph (3-07 B.1. and B.2).

3-08 ENGINEER: Engineer may be requested by the Division to assist in assuring that the work is performed in accordance with the Contract Documents.

Engineer shall have authority to condemn and reject defective work and materials, subject to the final decision of Division.

Engineer shall have no authority to permit deviation from the Contract Documents, and Contractor shall be liable for any deviation made without a written order from Division. See also Paragraphs 3-03 and 3-04.

3-09 DIVISION LAND RIGHTS: Division shall be responsible for obtaining all necessary land rights, including rights-of-way for construction access as specified, with respect to lands upon which work under the Contract is to be performed. Any delay in obtaining land rights by Division shall be deemed proper cause for consideration of adjustment of the Contract amount and/or the time of completion.

3-10 CONTRACTOR LAND RIGHTS: Contractor shall confine equipment, materials, and operations, to those areas described in the Contract Documents. Any additional land rights Contractor deems necessary for temporary construction facilities or for storage of materials shall be provided by Contractor with no liability to Division.

3-11 ENTRY ON PROPERTY: Contractor shall not enter upon public or private property outside of the easement area for any purpose without first obtaining permission from the appropriate landowner or official and shall be responsible for the preservation of all property along and adjacent to the street and/or right-of way, and shall use every precaution necessary to prevent damage thereto. Contractor shall take suitable precautions to prevent damage to pipes, conduits, and other underground structures, and shall take all reasonable steps to prevent damage and disturbance to monuments and property markers until an authorized agent has witnessed or otherwise referenced their location. Monuments and property markers shall not be removed until Division has been afforded the opportunity to independently observe and note the type and location of the monument or marker and to verify landowner's concurrence for removal.

3-12 REMOVAL OF CONSTRUCTION EQUIPMENT, TOOLS AND SUPPLIES: Upon termination of this Contract, and before final acceptance of the work by Division, Contractor shall remove from the project site all equipment, tools, supplies, excess materials, and wastes generated from the work. In the event Contractor fails to remove such items, Division or its representative shall have the right to remove them unless an agreement is made between Contractor and Landowner. See also Paragraph 7-10.

3-13 DIVISION'S RIGHT TO CORRECT DEFICIENCIES: In the event Contractor neglects to prosecute the work properly, or fails to perform any provision of this Contract, Division, after ten (10) days' written notice to Contractor, may without prejudice to any other remedy Contractor may have, make good such deficiencies and deduct the cost thereof from the payment then or thereafter due Contractor. See also Paragraph 7-10.

3-14 DIVISION'S RIGHT TO TERMINATE CONTRACT AND COMPLETE THE WORK: Division may, without prejudice to any other right or remedy, and after giving Contractor seven (7) days' written notice, terminate the employment of Contractor and take possession of the premises and all equipment, and materials thereon and finish the work by whatever method deemed expedient in the event of any one or more of the following:

1. Contractor is adjudged bankrupt; or

2. Contractor makes a general assignment for the benefit of Contractor's creditors; or
3. A receiver is appointed on account of insolvency; or
4. Contractor persistently or repeatedly refuses or fails, except in cases for which extension of time is provided, to supply enough properly skilled workers or proper materials; or
5. Contractor fails to make prompt payment to subcontractors or for materials or labor; or
6. Contractor persistently disregards laws, ordinances, or instructions of Division; or
7. Contractor is otherwise guilty of substantial violations of any provisions of the Contract.

Contractor shall not be entitled to receive any further payment until the work is finished. If the unpaid balance of the Contract price exceeds the cost of finishing the work, including compensation for additional material, administrative services, and designing and consulting fees, such excess shall be paid to Contractor. If the costs exceed the unpaid balance, Contractor shall pay the difference to Division. See also Paragraph 7-11.

3-15 TERMINATION DUE TO LACK OF FUNDS OR CHANGE IN LAW: Notwithstanding anything in this Contract to the contrary, and subject to the limitations, conditions, and procedures set forth below, Division shall have the right to terminate this Contract without penalty by giving sixty (60) days written notice to Contractor as a result of any of the following:

1. The legislature or governor fails to appropriate funds sufficient to allow Division to operate as required and to fulfill its obligation under this Agreement;
2. If funds are de-appropriated or not allocated;
3. If Division’s authorization to operate is withdrawn or there is a material alteration in the programs administered by the Division;
4. If Division’s duties are substantially modified.

Division agrees to make reasonable requests for the necessary funds. If any appropriation to cover the costs of this Contract becomes available within sixty (60) days subsequent to termination under this clause, the Division agrees to re-enter the Contract with Contractor, if Contractor is still available to provide staff to complete the services under the same provisions, terms, and conditions as the original Contract.

3-16 CONTRACTOR'S RIGHT TO TERMINATE CONTRACT: Contractor may terminate this Contract upon ten (10) days' written notice to Division if an order of any court or other public authority causes the work to be stopped or suspended for a period of ninety (90) days through no act or fault of Contractor or Contractor's employees. See also Paragraph 7-12.

3-17 SEPARATE CONTRACTS: Separate contracts may be let with other contractors in connection with the work of Contractor. Contractor shall cooperate with other contractors with regard to storage of materials and execution of their work. Contractor shall report to Division any irregularities which Contractor may detect which will not permit completion of the work in a satisfactory manner. Contractor shall not be responsible for defects which develop due to the work performed under separate contracts after the work is completed. Contractor shall report to Division immediately any difference between completed work by others and the Contract Documents.

3-18 SUBCONTRACTS: At the time specified by the Contract Documents or when requested by Division, Contractor shall submit in writing to Division for approval the names of the Subcontractors proposed for the work. Subcontractors may not be changed or substituted without Division approval. Contractor shall be responsible to Division for the acts and omissions of its Subcontractors, and their direct and indirect employees, to the same extent as Contractor is responsible for acts and omissions of its employees. The Contract Documents shall not be construed as creating any contractual relationship between any Subcontractor and Division.

Contractor agrees to bind every Subcontractor to the terms of the Contract Documents.

Contractor shall not assign, sublet, or transfer the whole or any part of the work herein specified without the written consent of Division. No such assignment, sublet, or transfer shall in any way relieve Contractor from any of the responsibilities assumed herein.

3-19 WORK DURING AN EMERGENCY: Contractor shall perform any work, and furnish and install any materials and equipment necessary, during an emergency endangering life or property. In all cases, Contractor shall notify Division of the emergency as soon as practicable but shall not wait for instructions before proceeding to properly protect both life and property. In cases where Contractor cannot or does not meet the emergency, as determined by Division, Division may take such action as it deems necessary to address the emergency.

3-20 ORAL AGREEMENTS: No oral order, objection, claim or notice by any party to the others shall affect or modify any of the terms or obligations contained in any of the Contract Documents, and none of the provisions of the Contract Documents shall be held to be waived or modified by reason of any act whatsoever, other than waiver or modification agreed to in writing, signed by the parties to be bound.

3-21 CONSTRUCTION SCHEDULE: After receiving the Notice-of-Award, Contractor shall complete the form provided by Division related to the Construction Progress Schedule that properly accounts for the construction and seeding dates, with consideration for possible weather delays as much as is practicable (*Document JJ*). The proposed Construction Progress Schedule shall be submitted to Division within a period not to exceed fourteen (14) days from receipt of the Notice-of-Award. Division reserves the right to request an amended schedule as it deems necessary to meet the contract completion deadline prior to issuing the Notice-to-Proceed. Adequate equipment and forces shall be made available by Contractor to start work on or before the accepted Construction Start Date. The Preconstruction Conference shall be scheduled within seven (7) days prior to the Construction Start Date, and work shall begin as scheduled unless otherwise mutually agreed to by the Contractor, Division, and Landowner.

Contractor shall coordinate all work to be accomplished in completing this project, including preparation and updating of completion schedules, coordination of work of all Subcontractors, and complete control of site utilization, from the beginning of construction activity through the warranty period following final acceptance of the Project by Division. Contractor shall keep Division and Engineer continually advised regarding the scheduling of construction activities.

A. **CONSTRUCTION PROGRESS SCHEDULE REQUIREMENTS:** Contractor shall include, at a minimum, the following items in the Construction Progress Schedule (*Document JJ*).
   1. The Construction Start Date
   2. The complete sequence of construction by major activity, identifying work of separate stages, and other logically grouped activities.
   3. The time of start and the expected duration (number of working days) for completion of each work component.
   4. All critical dates, including beginning and ending seeding period dates, and required waiting periods.

B. **SUBMITTAL OF CONSTRUCTION PROGRESS SCHEDULE:** Contractor shall submit the initial Construction Progress Schedule within fourteen (14) days of the receipt of the Notice-of-Award. Contractor shall submit updated Construction Progress Schedules at each monthly Progress Meeting and/or with all requests for Payment. This requirement does not apply during approved shut down periods.

C. **ADJUSTMENTS TO CONSTRUCTION PROGRESS SCHEDULE:** Any necessary adjustments to the Construction Progress Schedule shall be submitted to the Engineer and Division within seven (7) days of the cause for adjustment to be considered timely. Any Schedule adjustments that require rescheduling of the Preconstruction Conference or Final Walkthrough must be communicated as soon as possible to facilitate the scheduling of those conferences. Schedule adjustments reflecting a delay of progress may be accepted without fault of Contractor or may be accepted with a warning that the delay may still place Contractor in Default if the project should go beyond the allotted time for complete performance.

3-22 DELAYS AND EXTENSION OF CONTRACT TIME: By mutual agreement between Division and Contractor, extensions of the Contract time may be issued in a Contract Amendment. All applications for extension of time shall be submitted to Division by Contractor within ten (10) days of the occurrence of such delay and shall state reasons for the request.

A. **NO FAULT EXTENSION:** Delays caused by injunction or legal actions, "Acts of God" as determined herein, reasons described in Paragraph 6-10, or other causes beyond the control of Contractor, may entitle Contractor to an extension of time within which to complete the work. The party seeking to exercise this provision and not perform or delay performance pursuant to a “force majeure” shall immediately notify the other party of the occurrence and reason for the delay. The parties shall make every effort to minimize the time of nonperformance and the scope of work not being performed due to the unforeseen events. Dates by which performance obligations are scheduled to be met will be extended only for a period of time equal to the time lost due to any delay so caused.

B. **EXTENSION TO CURE DEFAULT:** In the event of an extension request without timely adjustments to the Construction Progress Schedule, or an extension request after schedule adjustments were accepted with a

warning of the continued risk of Default, or in the event an extension is required to correct work as described in Paragraph 5-06, Division may grant an extension to cure default and extend the time within which to complete the work if it is in the best interest of the Division. Extensions granted to cure Default of Contract may be subject to a Contract cost adjustment to assess Liquidated Damages as specified in Document CC.

No extension of time for performance shall be deemed valid unless mutually agreed upon by Contractor and Division and included in a duly signed and executed Contract or Amendment.

3-23 SUBMITTALS: Contractor shall deliver all submittals to the Division prior to performing work under Construction Specifications requiring submittals. The Division shall review the submittal for adequacy and will notify Contractor accordingly.

A. **GENERAL REQUIREMENTS:** Contractor shall meet the following requirements for all submittals:

1. Consecutively number and date all submittals;
2. Label with the Project name;
3. Include Contractor's name;
4. Include all pertinent subcontractor, and major suppliers' names;
5. Identify pertinent Plan Sheet and detail numbers;
6. Include Construction Specification Section number, as appropriate; and
7. Include Contractor's stamp, initialed or signed, indicating review.

B. **CERTIFICATES:** Contractor shall submit all certificates of compliance with the requirements of the Contract Documents as referenced in Construction Specifications. All certificates shall be sworn to by Contractor, and, where applicable, by the manufacturer, supplier, subcontractor, acceptable laboratory or testing authority, etc.

3-24 SEVERABILITY: If any provision of this Agreement is determined by a court of competent jurisdiction to be invalid or unenforceable, such determination shall not affect the validity or enforceability of any other part or provision of this Agreement.

SECTION 4 - SCOPE OF WORK

4-01 ADDITIONAL INSTRUCTIONS: If any Contract Documents are not sufficiently clear to permit Contractor to proceed with the work, the Division, may upon their own initiative or upon the request of Contractor, furnish additional written instructions, together with additional drawings as may be necessary. Requests by Contractor must be made sufficiently far in advance to permit preparation of instructions and drawings by the Division before commencement of the work.

For purposes of avoiding delays in the preparation of any additional instructions and drawings, the Division and Contractor shall jointly prepare a schedule showing the time for commencement of the work to be included in them and the time by which Contractor shall furnish the shop drawings necessary for their preparation. No work shall be performed by Contractor without proper drawings or instructions. Contractor shall at Contractor's expense, replace any wrongly executed work.

4-02 INCREASED OR DECREASED QUANTITIES OF BID WORK: Division reserves the right to make such alterations in bid item quantities included in the Proposal and Schedule of Prices (*Document CC*) as authorized by law and deemed necessary by Division. Such alterations shall be made by Change Order or Amendment approved by Division, and shall not be deemed a waiver of any conditions of the Contract Documents or an invalidation of any of the provisions thereof; provided, however, that the execution of an Amendment to the Contract acceptable to all parties of the Contract shall be necessary before any alteration is made which meets the definition in Paragraph 1-13 above. See Paragraph 7-03 for method of payment.

4-03 EXTRA WORK: Any work outside the scope of the original bid item work made necessary by alteration of or additions to the Contract Documents, or by other reasons for which no price is provided in the Contract, shall be performed by Contractor as directed by Division and Contractor shall be compensated therefore as provided under Paragraph 7-03.

Extra work which by reason of its character or extent is covered by a Contract Amendment between Division and Contractor, shall have the written consent of the Surety on the bond, but extra work and Change Orders not covered by an Amendment to the Contract shall not require the consent of the Surety. See also Paragraph 4-02.

4-04 CHANGED CONDITIONS: In the event Contractor encounters subsurface or latent physical conditions at the site differing materially from those indicated in the Contract, or unknown physical conditions of an unusual nature differing materially from those ordinarily encountered and generally recognized as inherent in work of the character provided for in the Contract, which changed or unusual conditions will be considered by Contractor as the basis for a claim for extra compensation, Contractor shall promptly, and before any such conditions are disturbed, notify the Division and Engineer by E-mail, of the alleged conditions, including an expected cost and/or time impact to the Contract.

Contractor shall be deemed to have waived any claim or claims for extra compensation in any manner arising out of the changed or unusual conditions in the event Contractor fails to provide Division written notice prior to disturbing the conditions.

Division and Engineer shall investigate and issue decisions on claims within a reasonable time. Engineer's decision, in consultation with Division, shall cover any changes in time, money, or both.

If Division determines conditions justify a claim for additional compensation, Division shall provide for additional payment for the particular phase of work in question by negotiated agreement with Contractor upon existing and/or new unit Contract prices, by cost plus an agreed percentage, or by any other equitable arrangement mutually agreed upon by Division and Contractor, and consented to in writing by the bond Surety. In any event, Contractor shall not be relieved, unless permitted by Division, from the obligation of resuming construction operations pending decision as to the validity of a claim, or pending the execution of a negotiated agreement to cover additional costs, if the claim is recognized under the provisions of this Paragraph of the General Conditions.

4-05 SALVAGE: Unless otherwise indicated in the Contract Documents, all castings, pipe and other material taken from the project site, except fencing, shall be the property of Contractor.

4-06 CLEANUP: Contractor shall at Contractor's expense remove and properly dispose of refuse and unused materials of any kind resulting from the work. Upon failure to do so within seventy-two (72) hours after request by the Division the work may be done by Division and the cost thereof charged to Contractor and deducted from the final estimate. See also Paragraph 7-10.

SECTION 5 - MATERIALS AND WORKMANSHIP

5-01 QUALITY OF EQUIPMENT AND MATERIALS: Contractor shall maintain quality control over subcontractors, suppliers, manufacturers, products, services, site conditions, and workmanship to produce first class work. Contractor shall comply with industry standards, except when the Contract Documents indicate more restrictive tolerances or more rigid standards. All work shall be performed by persons qualified to produce first class workmanship.

In order to establish standards of quality, Division has, in the detailed Construction Specifications, referred to certain products by name and catalog number. This procedure is not to be construed as eliminating from competition other products of equal or better quality by other manufacturers where fully suitable in design. Whenever a material is specified or described using the name of a proprietary product or the name of a particular manufacturer or vendor, the item specified shall be understood as establishing the type, function, and quality desired. Other manufacturers' products may be accepted provided sufficient information, including any necessary certifications, are submitted to allow the Division to determine that the products proposed are equivalent to those named. See Paragraph 3-23.

A. **DEFINITIONS:** The following definitions shall apply with respect to products specified in Construction Specifications:

1. Products specified by Reference Standard: Any product meeting that standard.
2. Products specified by "similar and equal to" preceding a single proprietary name: Any product meeting specified requirements; named product complies with Construction Specifications.
3. Products specified by "Basis of Design" preceding a single proprietary name: "Similar and equal to" is implied unless additional manufacturer's characteristics of named product were used in the design.

4. Products specified by naming products of manufacturers, without qualification: Contractor shall submit request for substitution for product or manufacturer not named.

B. **SUBSTITUTIONS WILL BE CONSIDERED ONLY WHEN:**

1. A specified product or material becomes unavailable or not practical
2. The substitution is substantially to Division's advantage (equal product for less life cycle cost or higher quality product at no change in the Contract sum);
3. Under no circumstances shall a substitution be considered absent a separate written approval by Engineer, even when indicated or implied on Shop Drawings or Product Data submittals.

C. **SUBSTITUTIONS SHALL BE PROCESSED AS FOLLOWS:**

1. Contractor shall document each request for substitution with complete data substantiating compliance of proposed substitution with Contract Documents. Such data must be submitted prior to submittal of first progress payment estimate, and shall at a minimum include:

   a. Comparison of Qualities of proposed substitution with that specified including all points of difference;
   b. Samples, drawings, or notes, where required or requested to show specific construction, finishes, etc.;
   c. Availability of maintenance service and source of replacement parts;
   d. Changes required in other elements of the work because of the substitution;
   e. Effect on Construction Progress Schedule;
   f. Name and address of similar projects on which product was used and date of installation.

2. Contractor shall abide by the Division’s judgment when proposed substitute materials or items of equipment are judged to be unacceptable and shall furnish the specified material or item of equipment in such case. All proposals for substitutions shall be submitted in writing by Contractor and not by individual trades or material suppliers. Division shall approve or disapprove proposed substitutions in writing within a reasonable time. No substitute materials shall be used unless approved in writing.

3. Contractor shall bear all costs for the Division’s services required to check proposed substitute methods or type of construction and, if accepted, to prepare record drawings. Products include material, equipment, and systems necessary to complete the project. These products shall, at a minimum, comply with Construction Specifications and referenced standards. Product components required to be supplied in quantity within a Construction Specification shall be identical and interchangeable.

4. Each substitution request shall constitute a representation that Contractor:
   a. Has investigated the proposed product and determined it meets or exceeds the specified quality and product standards in all respects;
   b. Shall provide the same warranty for substitution as for specified product;
   c. Shall coordinate installation and make other changes which may be required to complete work in all respects;
   d. Waives claims for additional costs which may subsequently become apparent.

5-02 MATERIALS FURNISHED BY DIVISION: Division shall furnish materials specifically indicated in the contract documents. Contractor shall notify Division if any defects in materials furnished are discovered. Contractor shall be responsible for any and all material loss or damage, including that caused by third parties, after receipt of material.

5-03 MATERIALS FURNISHED BY CONTRACTOR: All materials used in the work shall meet the requirements of the Contract Documents. All other materials not furnished by Division and used in the work whether specified or not shall be furnished by Contractor.

Contractor shall transport products by methods designed to avoid product damage and shall deliver products to the project site in an undamaged condition and in the manufacturer's unopened containers or packaging. Contractor shall provide

adequate equipment and personnel to handle products so as to prevent damage. Contractor shall promptly inspect all product shipments to assure compliance with all requirements, correctness of quantities, and that the products are undamaged. Contractor shall where necessary furnish all shop and installation drawings, product data, and samples, as indicated in Construction Specifications and Paragraph 3-23 of this Document.

5-04 TESTING SERVICES: Required inspection and testing services are intended to assist in determination of compliance of the work with requirements of the Contract but shall not relieve Contractor of responsibility for completion of all work in accordance with requirements of the Contract Documents. Requirements for specified inspections and tests are not intended to limit Contractor's quality control program but are instead intended to establish a minimum testing level considered necessary to adequately monitor compliance of construction materials and methods with Contract Documents. If special testing is required for the project, details will be described in the Special Conditions (*Document GG*).

A. **RESPONSIBILITY FOR TESTING:** Contractor shall retain and pay, at Contractor's expense, a qualified testing agency or laboratory (laboratories) as described below, to conduct material and construction compliance tests as required by the Contract Documents. Type, number and extent of the materials testing program is described in each respective Section of Construction Specifications. The testing laboratory shall be available throughout the construction period to ensure prompt compliance with these requirements.

B. **QUALIFICATION OF TESTING AGENCIES:** Except as otherwise indicated, and except where manufacturer's testing facilities are indicated as acceptable, Contractor shall retain recognized testing laboratories specializing in the required services and routinely having provided those services for a continuous period of at least three (3) years prior to execution of the Contract.

C. **REPORTS:** Test/inspection reports, including analysis of results and recommendations where applicable, shall be submitted in triplicate to the Division except as otherwise indicated. Where required or requested, copies shall also be submitted directly to governing authorities.

D. **COORDINATION:** Contractor shall cooperate with laboratory personnel; provide access to work; notify laboratory sufficiently in advance of operations to allow for assignment of personnel and scheduling of tests; furnish labor and facilities to provide access to work for testing purposes; and obtain and handle samples at the site.

E. **DIVISION'S TESTS:** Division reserves the right to conduct independent tests from time to time as it considers necessary to validate or amplify Contractor tests. Division may engage and pay the costs of an independent testing agency meeting the requirements set forth above when such tests are considered necessary or advisable. Any work found to be in non-compliance with requirements of the Contract Documents shall be corrected by Contractor and retested. Costs of retesting shall be paid by Contractor.

F. **CODE COMPLIANCE TESTING:** Inspections and tests required by codes, ordinances, or a plan approval authority, and conducted by a legally constituted authority, shall be the responsibility of, and be paid for by, Contractor, unless otherwise provided in the Contract Documents.

G. **CONTRACTOR'S CONVENIENCE TESTING:** Inspection or testing performed exclusively for Contractor's convenience shall be the sole responsibility of Contractor.

H. **LABORATORY TEST REPORTS:** Contractor shall submit copies of all laboratory reports describing results of tests on materials, products and workmanship, as such reports are made available by the testing agency. Contractor shall submit electronic copies to the Division.

5-05 STORAGE OF MATERIALS: Materials shall be stored in such manner as to ensure the preservation of their quality and fitness for the work. Contractor shall provide personnel to receive, unload, and store all materials and equipment delivered to the project site. Stored materials shall be located so as to facilitate prompt inspection. Contractor shall maintain the storage yard in a neat and orderly manner. In addition, the following shall apply to storage of materials:

A. Materials and equipment may be stored inside the project limits in locations approved by Division and Landowner. All areas disturbed for equipment and material access, or storage must be reclaimed after final use.

B. Products shall be stored in accordance with manufacturer's instructions, with labels intact and legible. Sensitive products shall be stored in weather-tight enclosures and maintained within temperature and humidity ranges required by manufacturer's instructions.

C. Any fabricated products stored outside shall be placed on sloped supports above ground. Products subject to deterioration shall be covered with impervious sheet coverings, with ventilation provided to avoid condensation.

D. Loose granular materials shall be stored on solid surfaces in well drained areas so as to prevent mixing with foreign matter.

E. Private property outside the work limits shall not be used for storage purposes without the written permission of Division, Landowner and/or other private property owner.

5-06 REJECTED WORK AND MATERIALS: All materials which do not conform to the requirements of the Contract Documents, are not equal to samples approved by the Division, or are in any way unsatisfactory or unsuited to the purpose for which they are intended, shall be rejected. Any defective work, whether the result of poor workmanship, use of defective materials, damage through carelessness, or any other cause shall be removed, and the work re-executed by Contractor at Contractor's expense.

Defective work or material may be condemned by the Division at any time before final acceptance of the work. Notice of condemnation shall be given in writing by the Division. Condemned work or material shall be removed or disposed of to the satisfaction of the Division within ten (10) days after written notice is given by the Division. In the event Contractor fails to remove rejected work or materials within ten (10) days after written notice to do so, Division may remove and store the materials at Contractor's cost. Failure or neglect on the part of the Division to condemn unsatisfactory material or reject inferior workmanship shall in no way release Contractor, nor shall it be construed as an acceptance of such work, nor shall the final acceptance bar Division from recovering damages in cases where fraud was practiced, or where defective work results from Contractor's dishonesty. No compensation shall be made for defective work or materials.

Work done contrary to or without regard to the instructions of the Division, work done without lines, grade and/or cross section stakes and grades shown on the Plans or as given by the Division, or deviation made from the Contract Documents, without written authority, shall be considered unauthorized and at the expense of Contractor, and shall not be measured or paid for by Division. Any and all work so done may be ordered removed and replaced immediately at Contractor's expense. See also Paragraph 7-08.

5-07 MANUFACTURER'S DIRECTIONS: Manufactured articles, material and equipment shall be applied, installed, connected, erected, used, cleaned and conditioned as directed by the Manufacturer unless herein specified to the contrary. In the event any such instructions conflict with Contract Documents, Contractor shall seek clarification from the Division before proceeding.

When required by individual sections of Construction Specifications, Contractor shall provide the following:

1. Manufacturer's printed instructions for delivery, storage, assembly, installation, startup, adjusting, and finishing, as appropriate. One (1) copy shall be maintained by Contractor for inclusion in the project record documents.
2. Qualified personnel to observe and, as applicable, provide appropriate recommendations regarding field conditions, conditions of surfaces and quality of installation workmanship, and startup of equipment.

5-08 PATENTS: All fees or royalties for patented inventions, equipment, or arrangements, that may in any manner be used in connection with the construction or erection of the work, or any part thereof, shall be included in the Contract unit price.

Contractor shall protect and hold harmless Division against any and all claims or litigation by reason of infringement of any patent rights on any materials, equipment, or construction furnished by Contractor.

5-09 GUARANTEE: Contractor guarantees all work and material against all defects for the period specified below and in the Performance Bond, or in the Special Conditions. Contractor shall repair or replace any such defective work and/or material to conform to the provisions of the Contract Documents and without expense to Division, within ten (10) days (or an agreed upon time allowance by Division and Landowner) of notification in writing by Division of such defective work or material. If Contractor fails to make the repairs or replacements or fails to make arrangements for the correction thereof within the period specified above, Division may do so and charge the cost to Contractor. Contractor shall perform the work so as to cause Division a minimum of inconvenience and interruption of services.

Neither the final certificate of payment, nor partial use or occupancy of the premises by Division or Landowner, or any provision of the Contract Documents, shall constitute an acceptance of work not done in accordance with the Contract

Documents or relieve Contractor or the Sureties of liability in respect to any express warranties or responsibility for faulty materials or workmanship.

Contractor or the Surety shall remedy any defects in the work and pay for any damages to other work resulting therefrom which may appear within a period of one (1) year from the date of final acceptance unless a longer period is otherwise specified in the Special Conditions. Division shall give notice of observed defects with reasonable promptness.

In case of default on the part of Contractor in fulfilling any part of the Contract Documents, Division may correct the work or repair the damage, and the cost and expense incurred in such event shall be paid by or become recoverable from Contractor. Should Contractor be required to perform tests that, due to climatic conditions, must be delayed, it is understood that such tests shall be accomplished by Contractor at the earliest possible date, with the provision that the General Guarantee period begins upon satisfactory completion of said test. Contractor's responsibility under this Section shall not be abrogated, in the event Division elects to initiate final payment. See also Paragraph 7-16.

5-10 UNFAVORABLE WEATHER CONDITIONS: During unfavorable weather, including but not limited to conditions involving wet or frozen ground, or other unsuitable construction conditions, Contractor shall confine operations to work which will not be adversely affected by such conditions, unless special means or precautions, as referenced in Construction Specifications, are taken by Contractor to perform the work in a proper and satisfactory manner.

As described in Paragraph 3-21, Contractor shall notify Division and Engineer in a timely manner (within seven (7) days) of any necessary Construction Progress Schedule adjustments required due to unfavorable weather conditions.

5-11 BOND: Prior to signing the Contract, Contractor shall furnish a good and sufficient performance bond on the provided form *(Document NN)* in the full amount of the Contract.

Bond shall guarantee faithful performance of the provisions of the Contract, including the guarantee of all work and materials against all defects for the period specified in the Performance Bond *(Document NN)*, and the payment of all bills and obligations arising from said Contract.

The Performance Bond, in the amount of one hundred percent (100%) of the Contract amount, shall remain in place for one year following the date of final acceptance by Division of ***all*** work included in the Contract. See also Paragraph 1-17.

5-12 PREFERENCE FOR LABOR AND MATERIAL: By virtue of statutory authority, preference shall be given to products and provisions grown and coal produced within the state of Iowa.

Contractor shall comply with all applicable federal, state, and local laws, rules, ordinances, regulations and orders when performing the services under this Agreement, including without limitation, all laws applicable to the prevention of discrimination in employment and the use of targeted small businesses as subcontractors or suppliers. Contractor declares that it has complied with all federal, state, and local laws regarding business permits and licenses that may be required to carry out the work performed under this Agreement.

SECTION 6 - LEGAL RELATIONS AND RESPONSIBILITY TO PUBLIC

6-01 INSURANCE AND RELATED PROVISIONS: Contractor assumes full responsibility for the safekeeping of all materials and equipment and for all unfinished work until final acceptance by Division, and if any of it be damaged or destroyed from any cause, Contractor shall replace it at Contractor's own expense.

Contractor shall be responsible for all areas used by Contractor and all subcontractors in the performance of the construction activities on site. Contractor shall exert full control over the actions of all employees and other persons with respect to the use and preservation of property, and new and existing facilities.

Contractor shall indemnify and hold harmless Division against any liens filed for nonpayment of bills in connection with the Contract work. Contractor shall furnish Division satisfactory evidence that all persons who have done work or furnished materials, equipment, or service of any type under this Contract have been fully paid prior to acceptance of the work by Division. See also Paragraph 7-13.

Contractor shall indemnify and hold harmless Division and Engineer from any and all liability, loss, cost, damage, and expense (including reasonable attorney's fees and court costs) resulting from, arising out of, or incurred by reason of any claims, actions, or suits based upon or alleging bodily injury, including death, or property damage arising out of or resulting

from Contractor's operations under this Contract, whether such operations be by Contractor or by any Subcontractor or by anyone directly or indirectly employed by either of them. Contractor shall obtain insurance for this purpose, which shall insure the interests of Division as the same may appear and shall file with Division certificates of such insurance.

A. **INSURANCE REQUIREMENTS:**

1. Contractor shall not commence work under this Contract until all insurance required hereunder has been obtained and proof of such insurance has been approved by Division, nor shall Contractor allow any subcontractor to commence work on subcontracts until all insurance required of subcontractor has been so obtained and approved. Insurance required under this article shall remain in effect during the life of the Contract, and for no less than one (1) year thereafter.
2. Contractor shall furnish for filing with Division a Certificate of Insurance, complete in all respects, showing compliance with requirements of this Section. Any certificate filed with Division which at any time is found to be incomplete or not in appropriate form shall be returned as unsatisfactory.
3. A rejected Certificate of Insurance shall be corrected as necessary and resubmitted until approved.
4. Each and every insurance policy, procured by Contractor, shall contain an endorsement stating that the insurance company shall not, prior to completion of project plus one (1) year thereafter, or prior to any policy expiration date shown on policy and certificate, whichever occurs first, terminate policy or change any coverage therein without written notice of such action at least thirty (30) days prior to termination or change, to Division.
5. Minimum insurance required is as specified below and in the amounts indicated:

TYPE OF INSURANCE		LIMITS OF LIABILITY
(a)	Workmen's Comp.	Statutory Workmen's Comp.
(b)	Employer's Liability	$500,000/$500,000/$500,000 Accident/Aggregate/Disease
(c)	Comprehensive - Gen. Liability	$1,000,000 Each Occurrence - Premises and Operations $1,000,000 Each Occurrence - Independent Contractors $1,000,000 Each Occurrence - Operations and Products $1,000,000 Each Occurrence - Contractual $1,000,000 Aggregate - Completed Operations and Products
(d)	Comprehensive - Automobile Liability	
	(i) Bodily injury	$ 500,000 Each Occurrence
	(ii) Property Damage	$ 500,000 Each Occurrence
	(iii) Hired and Non-Owned	$ 500,000
(e)	(Other) Umbrella	$1,000,000

6. XC or U coverage is optional and not required by the contractor unless specified in the Special Conditions. (XC – excavating caisson, U – underground).
7. Coverage shall include endorsement for broad-form property damage and broad-form personal injury.
8. Contractor agrees to assist in every possible manner the reporting and investigation of any accident, and upon request, to cooperate with all interested insurance carriers in the handling of any claim by securing and giving evidence and obtaining attendance of witnesses as required for any claim or suit.
9. The required insurance shall be written by a company licensed to do business in Iowa at the time the policy is issued. In addition, the company shall be acceptable to Division.

B. **NOTICES AND FEES:** Contractor shall procure and pay for all permits, fees, licenses, and bonds necessary for the prosecution of the work.

Contractor shall give all notices, pay all fees, and comply with all Federal, State, County, and municipal laws, ordinances, rules and regulations, and building and construction codes bearing on the conduct of the work. Contractor, as to all matters not particularly referred to and defined herein, shall notwithstanding be subject to the provisions of all pertinent ordinances which are hereby made a part hereof with the same

force and effect as if specifically set out herein. Permit forms and affidavits which are known to be required in completing this Project shall be the responsibility of Contractor.

1. Contractor shall notify landowners of adjacent property and utilities when prosecution of the work may affect them. When it is necessary to temporarily deny access by landowners or tenants to their property, or when any utility service connection must be interrupted, Contractor shall give notices sufficiently in advance to enable the affected persons to provide for their needs. Notices shall conform to any applicable local ordinance and, whether delivered orally or in writing, shall include appropriate information concerning the interruption and instructions as to how to limit their inconvenience.
2. Utilities and other concerned agencies shall be contacted at least forty-eight (48) hours, not counting weekends and/or legal holidays, prior to excavation near underground utilities or pole lines. Existing utilities at the construction site may include, but are not limited to, storm sewer, sanitary sewer, water, electric, telephone, gas, pipelines, cables, and tile lines.
3. Contractor shall make all necessary arrangements with utility companies for the preservation of all utility lines and shall at Contractor's expense, replace and/or relocate utility lines as required for construction.

C. SECURITY:

1. Contractor shall be responsible for protecting the site, and all work materials, equipment, and existing facilities thereon, against loss or damage attributable to vandals, livestock, and any unauthorized persons.
2. No claim shall be made against the landowner, tenant or the Division by reason of any act of any employee, trespasser, or any Subcontractor or agent of the Contractor, and Contractor shall repair any damage to landowner's property resulting from Contractor's failure to provide security measures as specified above.

6-02 USE OF PREMISES: Contractor shall confine equipment, materials, and work operations to the Project limits, as indicated in both the Contract Documents and any laws, ordinances, permits, or directions of Division, and shall not unreasonably encumber the premises with materials. Contractor shall use care in placing construction tools, equipment, excavated materials, and construction materials and supplies so as to cause the least possible damage to, and interference with, the property surrounding the site. Use of premises outside the Project limits, indicated in the Contract Documents, shall be at Contractor's sole risk. Contractor shall be responsible to coordinate and obtain written approvals for such use with landowners and appropriate governmental agencies.

6-03 CONFINEMENT OF OPERATIONS: It shall be Contractor's responsibility to confine construction activities within the limits of easements, property lines and limits of construction. Any damage to persons or property resulting from encroachments beyond these limits shall be the sole responsibility of Contractor.

6-04 SAFETY: Contractor shall at all times exercise reasonable precautions to protect persons, employees, and property. The safety provisions of applicable laws and local building and construction codes shall be observed.

Contractor's operations shall meet the requirements of all applicable laws relative to protection of persons, and the guarding against hazards of machinery and equipment.

Contractor shall provide and maintain, at Contractor's expense and on a twenty-four (24) hour basis, all necessary safeguards including, but not limited to, watchmen, warning signs or signals, barricades, and night lights at all unsafe places at or near the work. Special care shall be exercised to prevent vehicles, pedestrians, and livestock from falling into open trenches or being otherwise harmed as a result of the work.

Contractor shall in all cases maintain safe passageways at all road crossings, crosswalks and street intersections, and shall take all other reasonable precautions necessary to prevent accident or loss of any kind.

All work included under this Contract shall be done in accordance with the Occupational Health Act of 1970 (Williams-Steiger Act) as amended and enforced by the governmental authority responsible for the local enforcement of the Act. Enforcement and responsibility for fulfilling this provision of the Contract Documents shall rest solely with Contractor, superintendent, and foremen, and in no way shall rest with Division or Engineer.

Contractor shall comply with OSHA 2207 and Interpretation Document; Iowa Occupational Safety and Health Standards for Construction Industry (IOSH); and other applicable laws which are in effect on the date of issuance of the Notice-to-Bidders.

6-05 FAILURE TO PAY FOR LABOR AND MATERIALS: In addition to any other requirements imposed under Iowa law, if Contractor at any time fails to pay Subcontractors or laborers employed to perform work under the Contract, or fails to pay for the materials used therein, Division may withhold from the money which may be due Contractor under this agreement such amount or amounts as may be necessary for the payment of such Subcontractors, laborers, or for the cost of materials, and may, acting as agent for Contractor, apply the same to such payments and deduct the same from the final estimate of Contractor.

6-06 MOVING OF PUBLIC AND PRIVATE UTILITIES: Prior to completing any work, Contractor shall notify all affected utilities to move such portions of their installations as would be within the confines of the finished improvement. It shall be Contractor's responsibility to coordinate construction work with the utilities so as to cause the least possible interference and avoid any conflicts with provisions of the Contract Documents.

No utility, private or public, shall be moved to accommodate Contractor's equipment or method of operation when such utility does not conflict with the installation of the improvement under construction, unless Contractor assumes all costs associated with such removal.

6-07 PROTECTION OF PUBLIC AND PRIVATE UTILITIES: Contractor shall support and protect, by timbers or otherwise, all pipes, conduits, poles, wires or other apparatuses which may in any way be affected by the work. If, through Contractor's operations, any of said pipes, conduits, poles, wires, or apparatuses should be damaged, they shall be repaired by the authorities having control of same, and the cost of such repairs shall be borne by Contractor.

Contractor shall be further responsible for any damage to streets or other public property, or any private property, by reason of breaking of any water pipe, sewer or gas pipe, electric conduit, or other utility by or through Contractor's or any subcontractor's negligence.

6-08 DAMAGE TO EXISTING PUBLIC AND PRIVATE PROPERTIES: Underground utilities of record will be shown on the Contract Documents. These, however, are shown for general information only, and neither the Division nor Engineer assume any responsibility for improper locations of, or failure to show, utility locations on the Contract Documents.

Contractor shall take all reasonable and necessary precautions to protect lawns, trees and shrubs outside rights-of-way, sidewalks, curbs, pavements, utilities, adjoining property, and structures, and to avoid damage thereto. Contractor shall at Contractor's expense completely repair any damage thereto caused by Contractor's operations to the satisfaction of Division, except as otherwise provided in other portions of the Contract Documents.

Contractor shall further be responsible for maintaining all existing fences affected by the construction work until completion of the Contract. Fences that interfere with construction operations shall not be removed, relocated, or dismantled until approval is obtained from the Division and Landowner. In areas where the existing fences cannot be maintained due to construction operations, Contractor may be required, as deemed appropriate by Division, to provide temporary fences or other means to prevent unauthorized vehicular, pedestrian, or livestock access.

Contractor shall take all reasonable and necessary precautions to prevent dust from becoming a nuisance to the public, to neighbors, and to other work being performed on or near the site. Earth surfaces subject to dusting shall be kept moist with water or by application of a chemical dust suppressant. Dusty materials in piles or in transit shall be covered when practical to prevent blowing.

6-09 MAINTENANCE OF TRAFFIC: Contractor shall be responsible for maintenance, control, and the safeguarding of traffic within and immediately abutting the project during construction. When necessary, all barricades, signs, lights, and other protective devices shall be installed and maintained in conformity with the applicable statutory requirements of the authority having jurisdiction. Street closures, either partial or full, shall only be made with the approval and coordination of the appropriate Governmental Agencies.
When crossing existing public bridges for access and delivery to the site, the Contractor shall abide by posted weight limits or seek variances from the owner(s). If no weight is posted, the Contractor shall contact the bridge owner and obtain permission to cross it with any equipment.

6-10 USE AND OCCUPANCY PRIOR TO COMPLETION OF CONTRACT: Division and/or Landowner shall have the right to take possession of and use any completed or partially completed portions of the work, notwithstanding that the time for completing the entire work or such portions may not have expired; but such taking possession and use shall not be

deemed an acceptance of any portion of the work not completed in accordance with the Contract Documents. Any claims Division may have against Contractor shall not be deemed waived by such occupancy.

If Division's prior use increases the cost, or delays the completion of uncompleted work, or causes refinishing of completed work, Contractor shall be entitled to such extra compensation, or No-Fault Extension of time, or both, as Division in consultation with Engineer determines reasonably necessary.

6-11 PERSONAL LIABILITY: Neither the Division, their employees, Engineer, or any state or federal employee shall be personally responsible for any liability arising under or growing out of the Contract. See also Paragraph 6-01.

6-12 NO WAIVER OF LEGAL RIGHTS: Should an error be discovered in or payment of unauthorized work be made by the final estimate, or should dishonesty on the part of Contractor be discovered in the work, Division reserves the right, after final payment has been made, to claim and recover by any lawful means such sums as may be sufficient to correct the error, to recover the overpayment, or to make good the defects in the work resulting from Contractor's dishonesty.

SECTION 7 - MEASUREMENT AND PAYMENT

7-01 MEASUREMENT: The determination of pay quantities for work performed under the Contract shall be made by the Division based upon the lines, grades, and cross sections given, or measurements made by Engineer. All items shall be computed in the units in the Proposal and Schedule of Prices *(Document CC)*.

The method to be used in measuring and calculating the payment quantity for each work item set forth in the Proposal and Schedule of Prices *(Document CC)* is described in the particular section of Construction Specifications in which work to be accomplished under that particular work item is described.

7-02 SCOPE OF PAYMENT: Contractor shall accept the compensation, as provided in the Contract Documents, in full payment for:

1. Furnishing all supervision, labor, materials, tools, and equipment necessary to complete the work covered by the Contract Documents;
2. Loss or damage arising from the nature of the work, the action of the elements, or any unforeseen difficulties encountered during the prosecution of the work until final acceptance by Division,
3. All risks of every description connected with the prosecution of the work;
4. All expenses incurred in consequence of the suspension or discontinuance of the work;
5. Completing the work according to the Contract Documents.

The Contract unit prices for the various bid items of the Contract shall, unless the Contract Documents provide otherwise, constitute full compensation for all labor, materials, supplies, equipment, tools and all things of whatsoever nature required for the complete incorporation of the item into the work, the same as the item were to read "In Place".

Separate payment shall be made based on Contractor's unit bid price and the quantity of construction completed at the time of acceptance by Division only for those items specifically listed in the Proposal and Schedule of Prices *(Document CC)*. No separate payment shall be made for the work required to complete this project except for those bid items set forth in the Proposal and Schedule of Prices *(Document CC)* or such other bid items as may be approved by Change Order or Amendment to the Contract. This compensation shall constitute full payment for Contractor's providing of all labor, materials, equipment, and supervision, necessary to complete the construction as specified in the Contract Documents. All other work is incidental to the project. Payment for materials shall be made only for materials actually incorporated in the work or stored on site. Payment for extra work shall be made in accordance with Paragraph 7-03 of this Section. Payment shall be made on the basis of monthly estimates in amounts equal to ninety-seven percent (97%) of the value of the work completed, in accordance with Paragraph 7-04 of this Section.

Neither the payment of any estimate nor the payment of any retained percentage shall relieve Contractor of any obligation to make good any defective work or material.

7-03 PAYMENT FOR EXTRA WORK: Adjustments, if any, in the amounts to be paid Contractor by reason of any change, or addition, shall be determined by one or more of the following methods:

1. By an acceptable lump-sum proposal from Contractor;

2. By Contract unit prices as contained in the Proposal and Schedule of Prices *(Document CC)*, or by unit prices mutually agreed upon by Contractor and Division;
3. By payroll cost of labor plus fifteen percent (15%) for profit, overhead and small tools, plus the amount of social security tax imposed by law upon Contractor, plus the cost of workmen's compensation, public liability insurance and employment security contributions;
4. By actual cost of materials delivered to the work, including freight and hauling charges as shown by original receipted bills, plus fifteen percent (15%); or
5. By equipment rental rates for machinery, tools and equipment, except small hand tools, as determined from current publications of recognized equipment dealers.

It shall be Contractor's responsibility to obtain proper written authorization from Division before proceeding with any extra work. Division recognizes that certain bid items are supplied in amounts that may vary slightly from the bid quantity. Contractor shall maintain receipts and/or weigh tickets for such items and submit same to Engineer. Where the variation in quantity is deemed acceptable by Division, an adjustment for Final or Actual Quantities shall be made in a single Change Order prior to the Final Payment Application. No charge for extra work or any other change in the Contract shall be allowed unless: (1) the extra work or change has been authorized by a written Change Order or Contract Amendment, signed by Division, and if applicable by the Surety, and (2) the compensation or method thereof is stated in such signed Change Order or Contract Amendment. See also Paragraphs 4-02, 4-03 and 4-04.

7-04 PROGRESS PAYMENTS/RETAINED PERCENTAGE: Contractor shall be entitled to monthly progress payments corresponding to the stage of the work. The initial progress estimate shall be initiated by Contractor not later than thirty (30) days after commencing work. Subsequent progress estimates shall be prepared at approximately thirty (30) day intervals when work is being performed on the project. Engineer shall submit amounts based upon an estimate of quantities of work completed, multiplied by the unit prices established in the Contract, or shall be based upon estimated completed percentages of work listed in Contractor's approved price breakdown for lump sum items.

Cost of materials, properly stored, protected and insured at the site of work shall be paid for as requested by Contractor, and as provided for in the Contract Documents. In preparing monthly estimates, advancements shall be made for ninety-seven percent (97%) of the cost of such materials, as evidenced by invoices accompanying each payment request submitted by Contractor, and, if required by Division, after providing proof of insurance for the specified products, materials, or equipment. All materials must conform to the requirements of the Contract Documents; however, advancement for materials shall not constitute acceptance, and any faulty material shall be condemned although advancement may have been made for same in the estimates.

Quantities used for progress estimates shall be considered only as approximate and provisional, and shall be subject to recalculation, adjustment and correction by Division in subsequent progress estimates and in final estimates. Inclusion of any quantities in progress estimates, or failure to disapprove the work at the time of progress estimate, shall not be construed as acceptance of the corresponding work or materials.

Processing for payment of the retained percentage shall be withheld for a period of thirty (30) days following final acceptance by Division, and shall be processed for payment thereafter, in the event no claims, as provided by law, have been filed against such funds. In the event such claims are filed, Contractor shall be paid, after said funds are released from liens, such retained percentages, less an amount sufficient to pay any such claims, as authorized under Iowa law.

Progress payments shall be applied for and shall be processed in accordance with applicable provisions of the Contract Documents.

A. **PAYMENT APPLICATION FORMS:** Appropriate Application and Request for Payment *(Document SS)* forms shall be provided by Division.

B. **INITIAL PAYMENT APPLICATION:** The principal administrative actions and submittals which must precede submittal of first payment application request shall include, but not necessarily be limited to, the following:

1. Listing of subcontractors and principal suppliers and fabricators.
2. Schedule of principal products.
3. Schedule of submittals.
4. Copies of acquired permits and similar authorizations and licenses from governing authorities for performance of the work.

5. Refer to the Contract Documents and comply with any requirements not herein listed.

C. **SUBMITTAL OF APPLICATION AND REQUEST FOR PAYMENT** *(DOCUMENT SS)*: The following procedure shall be used to submit all progress pay requests:

1. Engineer shall prepare a summary of items completed or in progress for each pay application. Contractor shall supply any necessary receipts and attachments to Engineer for this purpose.
2. Mobilization costs shall be paid at a percentage of the lump sum bid amount for this item equal to the overall percent complete of the project.
3. Division shall prepare Document SS and submit to Contractor and Engineer.
4. Contractor and Engineer shall have the opportunity to review and comment regarding quantities, Division may make revisions as necessary and appropriate.
5. Engineer and Contractor shall both sign agreed upon payment application. (Scanned copies with signatures are acceptable.) Engineer shall submit the executed copy of each payment application to Division by E-mail.

D. **RETAINED PERCENTAGE:**

1. Division may withhold from payments to Contractor, in addition to the retained percentage pursuant to Paragraph 7-02 and this Paragraph (7-04), amounts necessary to cover:

   a. Payments that may be earned or due for just claims for labor or materials furnished in and about the work, in excess of, or not subject to, the amount retained pursuant to this Section.
   b. Payments for defective work not remedied.
   c. Amounts deemed reasonably necessary for completion of the work remaining in an individual bid item, or for the completion of the total work covered by the Contract Documents.
   d. Payments for extra administrative, Engineering, design, and inspection costs if Contractor has not completed the work within the time specified, which may include per-day liquidated damages if assessed as specified in Paragraph 3-22 and 7-17.

2. Division shall disburse and shall have the right to act as agent for Contractor in disbursing such funds as have been withheld pursuant to this paragraph to the party or parties who are entitled to payment therefrom. Division shall render to Contractor a proper accounting of all such funds disbursed on Contractor's behalf.

3. In the event claims are filed in a timely manner, Division shall withhold from payment to Contractor an amount equal to at least double the amount of such claims. Division shall release such funds to Contractor upon compliance with Iowa Code Section 573.16.

4. In preparing monthly estimates, advancement shall be made for ninety-seven percent (97%) of the cost of materials described in the second paragraph of this Section as evidenced by invoices accompanying each payment request submitted by Contractor.

E. **RELEASE OF RETAINAGE AT NINETY-FIVE PERCENT (95%) PROJECT COMPLETION**

Iowa Code Section 573.27 permits full payment for completed work when at least ninety-five percent (95%) of the construction contract has been completed to the satisfaction of the public contracting authority, and owing to conditions beyond the control of Contractor, the remaining work covered by the Contract Documents cannot proceed for a period of more than sixty (60) days. In that event, Contractor may request payment of the retainage on work completed and accepted and, if approved, a Contract Amendment *(Document II)* shall be prepared. Processing for the release of the retainage shall be subject to the thirty (30) day waiting period as discussed in this Paragraph (7-04). In any event, the performance bond must remain in effect through the entire period of the Contract (see Paragraph 5-11 above).

This Section is intended to implement Iowa Code Chapter 573 and shall not be considered a waiver of any provisions of said Chapter. In the event any portion of this Section is held by a court of competent jurisdiction to be inconsistent with Chapter 573, the provisions of Chapter 573 shall control.

7-05 DIVISION'S ACTION ON AN APPROVED REQUEST FOR PAYMENT: Within thirty (30) days from the date Division receives an executed Application and Certificate for Payment, Division shall:

1. Pay their portion of Application and Certificate for Payment as approved; or
2. Pay such other amount as Division deems due and owing Contractor, informing Contractor in writing of the reasons for paying the amended amount; or
3. Withhold payment informing Contractor of the reasons for withholding payment.

7-06 INTEREST ON UNPAID REQUESTS FOR PAYMENT: In the event Division fails to pay their portion of a completed Application and Certificate for Payment within thirty (30) days from the date Division receives the approved request, and further fails to inform Contractor in writing of the reasons for withholding payment, Division shall pay Contractor interest at the rate of five percent (5%) per annum on the unpaid balance from the date such payment was due until payment is made.

7-07 PAYMENT FOR UNCORRECTED WORK: In the event Division or Engineer directs Contractor not to correct work that has been damaged, or that was not performed in accordance with the Contract Documents, an equitable deduction from the Contract amount shall be made to compensate Division for the uncorrected work.

7-08 PAYMENT FOR REJECTED WORK AND MATERIALS: The removal of work and materials rejected under Paragraph 5-06, and the re-execution of acceptable work by Contractor, shall be at Contractor's expense, and Contractor shall pay the cost of replacing the work of other contractors destroyed or damaged by the removal of the rejected work or materials and the subsequent replacement of acceptable work.

Removal of rejected work or materials, and storage of materials by Division in accordance with Paragraph 5-06, shall be paid by Contractor within thirty (30) days of written notice by Division. If Contractor does not pay the expense of such removal within ten (10) days' written notice by Division of the intent to sell the materials, Division may sell the materials at auction or private sale and shall pay Contractor the net proceeds therefrom after deducting all cost and expense that should have been borne by Contractor.

7-09 PAYMENT FOR WORK SUSPENDED BY DIVISION: If the work or any part thereof shall be suspended by Division and abandoned by Contractor as provided in Paragraph 3-03, Contractor shall be entitled to payment for all work performed on the portions so abandoned, plus fifteen percent (15%) of the value of the uncompleted portion of the abandoned work to compensate for overhead, plant expense, and anticipated profit.

7-10 PAYMENT FOR WORK BY THE DIVISION: The cost of work performed by Division in removing construction equipment, tools and supplies in accordance with Paragraph 3-12, and correcting deficiencies in accordance with Paragraphs 3-13 and 4-06, shall be paid by Contractor.

7-11 PAYMENT FOR WORK BY DIVISION FOLLOWING DIVISION'S TERMINATION OF CONTRACT: Upon termination of the Contract by Division in accordance with Paragraph 3-14, no further payments shall be due Contractor until the work is completed. If the unpaid balance of the Contract amount shall exceed the cost of completing the work, including all overhead costs, the excess shall be paid to Contractor. If the cost of completing the work shall exceed the unpaid balance, Contractor shall pay the difference to Division. The costs and damages incurred by Division through Contractor's default, shall be certified and approved by Division.

7-12 PAYMENT FOR WORK TERMINATED BY CONTRACTOR: Upon termination of the Contract by Contractor in accordance with Paragraph 3-16, Contractor shall be entitled to payment for the work performed, plus loss of vegetative and other materials stored on site, plus established profit and damages, as approved by Division.

7-13 RELEASE OF LIENS: Contractor shall deliver to Division a complete release of all liens arising out of this Contract before the final pay request for the retainage is processed. If any lien remains unsatisfied after all payments are made, Contractor shall refund to Division such amounts as Division may have been compelled to pay in discharging such liens including all costs and reasonable attorneys' fees authorized by Iowa law.

7-14 FINAL ACCEPTANCE AND FINAL PAYMENT: Prior to seeding, a Final Walkthrough (as scheduled in the most current Construction Progress Schedule) shall be conducted on site with the Engineer, Contractor, and Division. Prior to Final

Acceptance, Contractor shall complete any final punch list items identified during the Final Walkthrough and clean up the site. Site cleanup shall include removal of all construction debris, equipment, excess and waste materials. Final inspection and tests may be conducted by representatives of Division and/or Engineer, and Contractor. Inspections and tests shall be conducted at a time convenient to all parties required to be present. Inspections and tests will be subject to the availability of facilities necessary to the conducting of such inspections and tests, if required. Failure of the completed work or any component thereof to pass inspections or tests shall be cause for initial rejection of the work or component. Final acceptance of the entire project shall not be made until any rejected portions are corrected, and re-inspected or retested, and approved by Division. Subsequent failures of the project or component to pass inspection and tests may, at Division's option, result in final rejection, or in acceptance with assessment of damages for such failure.

Following final tests and inspections, Engineer shall notify Division and Contractor if the project is acceptable, in total or in part, and whether it appears to be in compliance with Contract Document requirements. Division shall not agree to Final Acceptance or make Final Payment until receipt of written certification from Engineer declaring the work of Contractor to be complete and in substantial conformance with the Contract Documents.

The administrative actions and submittals which must precede or coincide with submittal of final payment application shall be as follows:

A. **FINAL ACCEPTANCE REQUIREMENTS:** Prior to requesting certification of final acceptance and final payment, as required above, Contractor shall submit:

1. Final payment request;
2. Record documents (See Paragraphs 2-05 & 7-04)
3. Updated final work quantities accounting for additional (final) changes to Contract sum;
4. Final liquidated damages settlements statement acceptable to Division, if applicable

Final acceptance shall not relieve Contractor of the responsibility to restrict operations so as not to result in damage to accepted work. Any damage to said work caused by subsequent operations of Contractor, Contractor's personnel, or equipment shall be satisfactorily repaired at Contractor's expense.

Final acceptance of completed work shall be evidenced by Division's certification of final acceptance, and payment of Contractor's final estimate. Contractor's acceptance of payment of final estimate, or payment offered as final payment, shall constitute a release to Division and every officer and agent thereof from all claims and liabilities of Contractor for anything done or furnished, or relating to the work, or for any act or neglect of Division or of any person relating to or affecting the Contract.

7-15 TERMINATION OF CONTRACTOR'S RESPONSIBILITY: The work covered by the Contract Documents shall be considered complete when all work has been finished, the final inspection has been made by the Division, and the requirements for final acceptance set forth above have been met as evidenced by Division's certification of final acceptance. Contractor's responsibility shall then cease, except as set forth in the guarantee periods contained in Contractor's Performance Bond *(Document NN)*

7-16 CORRECTION OF FAULTY WORK AFTER FINAL PAYMENT: Neither the approval of the Final Application and Certificate for Payment by Division, nor the certification of final acceptance by Division, or the making of the final payment by Division to Contractor, shall relieve Contractor of responsibility for faulty materials or workmanship. Division shall promptly give notice of faulty materials or workmanship to Contractor and Contractor shall promptly replace any such defects. Division shall decide all questions arising under this Paragraph; provided, however, that all such decisions shall be subject to arbitration. See also Paragraphs 5-09 & 5-11.

7-17 LIQUIDATED DAMAGES: In the event Contractor fails to complete the work provided for herein within the times specified or otherwise agreed to, Division shall be entitled to per-day liquidated damages estimated based on the extra administration, designing, and inspection costs necessitated by the continuance of the work beyond the times herein specified for completion, and the continued costs to the natural environment by the failure to fully enact the nutrient reduction practice(s). The per-day liquidated damages charged to Contractor in no way constitute a penalty but represent additional expense to Division caused by delayed completion of the work by Contractor.

Liquidated Damages shall be assessed as provided for in Document CC, taking into account any No-Fault Extensions of time granted by properly executed Contract Amendments. Such sums shall be deducted from the final pay request prior to payment.

7-18 CUMULATIVE RIGHTS: The various rights, powers, options, elections, and remedies of Division provided for in this Contract shall be construed as cumulative and no one of them is exclusive of the others or exclusive of any rights, remedies or priorities allowed by law, and shall in no way affect or impair the right of Division to pursue any other contractual, equitable, or legal remedy to which they may be entitled. The election by Division of any one or more remedies shall not constitute a waiver of the right to pursue other available remedies.

END OF DOCUMENT FF

SPECIAL CONDITIONS

SECTIONS

SECTION 1 - DEFINITIONS
SECTION 2 - PLANS, SPECIFICATIONS AND RELATED DATA
SECTION 3 - SCOPE OF WORK
SECTION 4 - DIVISION – CONTRACTOR RELATIONS
SECTION 5 - MATERIALS AND WORKMANSHIP
SECTION 6 - LEGAL RELATIONS AND RESPONSIBILITY TO PUBLIC
SECTION 7 - MEASUREMENT AND PAYMENT

TABLE OF CONTENTS

GENERAL: GG-1
SECTION 1 – DEFINITIONS GG-2
1-04 ENGINEER GG-2
1-05 WORK OR PROJECT GG-2
1-25 TIME OF COMPLETION GG-2
SECTION 2 – PLANS, SPECIFICATIONS AND RELATED DATA GG-2
2-01 INTENT OF PLANS AND SPECIFICATIONS GG-2
SECTION 3 – ENGINEER – DIVISION – CONTRACTOR RELATIONS GG-3
3-23 SUBMITTALS GG-3
SECTION 4 – SCOPE OF WORK GG-3
SECTION 5 – MATERIALS AND WORKMANSHIP GG-3
5-04 TESTING SERVICES GG-3
SECTION 6 – LEGAL RELATIONS AND RESPONSIBILITY TO PUBLIC GG-3
SECTION 7 – MEASUREMENT AND PAYMENT GG-3

GENERAL:

A. The purpose of this Section of the Specifications is to provide supplementary information, which is required to clarify the General Conditions, and to set forth supplementary requirements, modifications and/or deletions from the General Conditions which are required to adapt said General Conditions to this particular project.

B. References to Section, Paragraph and Sub-paragraph numbers used in these Special Conditions are intended to coincide with reference numbers for corresponding Sections, Paragraphs and Sub-paragraphs in the General Conditions (*Document FF*).

C. Where there is any variance between the General Conditions and these Special Conditions, the Special Conditions shall take precedence.

D. Where any section of the General Conditions is modified or any Paragraph, Sub-paragraph or Clause thereof is changed or deleted by these Special Conditions, the unaltered provisions of that Section, Paragraph, Sub-paragraph or Clause in the General Conditions shall remain in effect. Unless these Special Conditions make specific reference to the modification or deletion of a Paragraph, Sub-paragraph or Clause in the General Conditions, no changes are intended and paragraphs contained in these Special Conditions are intended only to supplement, amplify, or clarify said General Conditions.

SECTION 1 – DEFINITIONS

1-04 ENGINEER

The Engineer for this project is defined below.

Brandon Short, P.E.
Bolton & Menk
1519 Baltimore Dr
Telephone: 515-509-9296
E-mail: brandon.short@bolton-menk.com

A representative with Bolton & Menk will perform the field inspections and construction staking for this project.

1-05 WORK OR PROJECT

Work to be completed and equipment, supplies, and materials to be furnished under the Contract, General Conditions, Special Conditions, Construction Specifications, Drawings, Addenda, and Modifications to these Contract Documents issued subsequent to their initial printing, unless some other meaning is indicated by the context. The Project is the Cla953734C Nutrient Reduction Wetland in Section 34, Township 95 North, Range 37 West, in Clay County, Iowa.

1-25 TIME OF COMPLETION

All construction work, except for seeding, for this project is to be completed no later than November 15, 2027. The buffer seeding for this project is to be completed no later than 12/15/2027 and the structure seeding is to be completed by 12/15/2027 and within the respective seeding period indicated in the specifications.

SECTION 2 – PLANS, SPECIFICATIONS AND RELATED DATA

2-01 INTENT OF PLANS AND SPECIFICATIONS

Reference to standard specifications of any technical society, organization or association, or to codes of local or state authorities shall mean the latest standard, code, specification or tentative specification adopted and published at the date of taking bids, unless specifically stated otherwise. Applicable codes and standards referred to in the Specifications shall establish minimum requirements for equipment, materials, and construction, and shall be superseded by more stringent requirements of Plans and Construction Specifications when and where they occur. Any conflicts between the Plans or Construction Specifications and applicable codes and standards shall be referred to the Engineer for a decision thereon.

The Plans upon which the bids and the Contract are based include the following list:

Sheet Title	Sheet Number	Date of Drawing
TITLE SHEET	A.01	02/25/2026
PLAN OVERVIEW	A.02	02/25/2026
EXISTING CONDITIONS AND REMOVALS	A.03	02/25/2026
WATER CONTROL STRUCTURE DETAILS	B.01	02/25/2026
SHEET PILE DETAILS	B.02	02/25/2026
CPDT INSTALLATION DETAILS	B.03	02/25/2026
RCP INSTALLATION DETAILS	B.04	02/25/2026
MISCELLANEOUS DETAILS	B.05	02/25/2026
ESTIMATED QUANTITIES	C.01	02/25/2026
GRADING OVERVIEW	D.01	02/25/2026
PLAN & PROFILE - EMBANKMENT	D.02	02/25/2026
PLAN & PROFILE - SITLLING BASIN & OUTLET CHANNEL	D.03	02/25/2026
PLAN & PROFILE - AUXILIARY SPILLWAY	D.04	02/25/2026
PLAN & PROFILE - DIVERSION BERMS	D.05	02/25/2026
SEEDING OVERVIEW	K.01	02/25/2026
PLAN & PROFILE - TILE MAIN RE-LAY	M.01	02/25/2026
PLAN & PROFLE - DRAWDOWN PIPE & NEW TILE INSTALLATION	M.02	02/25/2026

The Construction Specifications which govern the materials furnished and the work performed under this Contract are divided, classified, designated, and arranged as follows:

IA-01	Site Preparation	1-1 to 1-2
IA-05	Pollution Control	5-1 to 5-2
IA-06	Seeding and Mulching for Protective Cover	6-1 to 6-4
IA-08	Mobilization with standard sign installation detail	8-1 to 8-3
IA-09	Drain Tile Investigation and Removal	9-1 to 9-4
IA-11	Removal of Water	11-1 to 11-2
IA-13	Sheet Piling	13-1 to 13-2
IA-21	Excavation	21-1 to 21-3
IA-23	Earthfill	23-1 to 23-4
IA-24	Drainfill	24-1 to 24-3
IA-26	Topsoiling	26-1 to 26-2
IA-31	Concrete	31-1 to 31-7
IA-46	Tile Drains for Land Drainage	46-1 to 46-4
IA-51	Corrugated Metal Pipe Conduits	51-1 to 51-3
IA-61	Loose Rock Riprap	61-1 to 61-2
IA-62	Concrete Grout for Riprap	62-1 to 62-3
IA-85	NOT FOUND	85-1 to 85-2
IA-95	Geotextile	95-1 to 95-4

No attempt has been made to segregate the work to be performed by any trade, subcontract, or proposal item, on any one Drawing of the Plans or any one Section of the Construction Specifications. Any segregation between trade of craft jurisdictional limits, and the establishment of subcontract limits, shall be solely a matter of agreement between the Contractor and his employees and subcontractors. The Plans and Construction Specifications shall govern the construction of the entire work, and the provisions thereof govern each item and unit of work to which such provisions shall apply.

SECTION 3 – ENGINEER – DIVISION – CONTRACTOR RELATIONS

3-23 SUBMITTALS

SECTION 4 – SCOPE OF WORK

None

SECTION 5 – MATERIALS AND WORKMANSHIP

5-04 TESTING SERVICES

Certifications of materials delivered to the site shall be provided as required in the Construction Specifications.

SECTION 6 – LEGAL RELATIONS AND RESPONSIBILITY TO PUBLIC

None

SECTION 7 – MEASUREMENT AND PAYMENT

None

END OF DOCUMENT GG

State of Iowa
Iowa Department of Agriculture and Land Stewardship
DIVISION OF SOIL CONSERVATION AND WATER QUALITY

KNOW ALL PERSONS BY THESE PRESENTS:

That we,

_____
(Name of Company)

_____
(Address)

_____
(City, State, Zip)

as ***PRINCIPAL***, and

_____
(Name of Surety)

_____
(Address)

_____
(City, State, Zip)

as ***SURETY(S)***,

are hereby held and firmly bound unto the State of Iowa in the penal sum of _____ ___/100 Dollars ($_____) for the payment, whereof, the said ***PRINCIPAL*** and ***SURETY(S)*** bind themselves, their heirs, executors, administrators, successors and assigns, jointly and severally, firmly by these presents.

The conditions of this obligation are such that whereas the ***PRINCIPAL*** entered a certain contract, hereto attached, and made a part, hereof, with the State of Iowa, acting by and through the Iowa Department of Agriculture and Land Stewardship, Division of Soil Conservation and Water Quality, hereinafter called the ***DIVISION***, dated
for the:

Nutrient Reduction Wetland Project Construction Contract
Location: Section 34, Township 95 North, Range 37 West, Clay County, Iowa
Project ID: Cla953734C

NOW THEREFORE,

the conditions of this obligation are such that if the ***PRINCIPAL*** shall faithfully perform the contract in accordance with the plans, specifications and contract documents, and shall fully indemnify and save harmless the State of Iowa from all cost and damage which the State of Iowa may suffer by reason of the ***PRINCIPAL'S*** default or failure to do so and shall fully reimburse and repay the State of Iowa all outlay and expense which the State of Iowa may incur in making good any such default, then this obligation shall be null and void, otherwise it shall remain in full force and effect.

In the event the ***PRINCIPAL*** is in default under the contract as defined herein, the ***DIVISION*** shall by written notice inform the ***PRINCIPAL*** that his contract is in default. And may, at its option, without process or action at law:

1. Take over all or any portion of the work and complete it either by day labor or reletting the work. The ***DIVISION*** may retain all material, equipment and tools on the work, at a rental which it considers reasonable, until the work has been completed.

2. Allow the ***SURETY*** to take over the work within fifteen (15) days and assume completion of said contract and become entitled to the balance of the contract price.

3. Allow the ***PRINCIPAL*** to complete the work included in the contract.

As required by Iowa Code Chapter 573:

1. The ***PRINCIPAL SURETY(S)*** on this bond hereby agree to pay all persons, firms or corporations having contracts directly with the ***PRINCIPAL*** or with subcontractors, all just claims due them for labor performed or materials furnished, in the performance of the contract on account of which this bond is given, when the same are not satisfied out of the portion of the contract price which the public corporation is required to retain until completion of the public improvement, but the ***PRINCIPAL*** and ***SURETIES*** shall not be liable to said persons, firms, or corporations unless the claims of said claimants against said portion of the contract price shall have been established as provided by law.

2. Every ***SURETY*** on this bond shall be deemed and held, any contract to the contrary notwithstanding, to consent without notice:

    a. To any extension of time to the contractor in which to perform the contract.

    b. To any change in the plans, specifications, or Contract Documents, when such change does not involve an increase of more than twenty percent of the total contract price, and then only as to such excess increase.

    c. That no provision of this bond or of any other Contract Documents shall be valid which limits to less than one year from the time of the acceptance of the work, the right to sue on this bond for defects in workmanship or material not discovered or known to the ***DIVISION*** at the time such work was accepted.

No provision of this bond or of any other Contract Documents shall be valid which limits to less than five years after the acceptance of the work, the right to sue on this bond for defects in workmanship or material in connection with paving or concrete work.

IN WITNESS WHEREOF,

the above bounden parties have executed this instrument under their several seals this _____ day of _____, 20__ __, the name and corporate seal of each party being hereto affixed, and these presents duly signed by its undersigned representative pursuant to authority of its governing body.

PRINCIPAL

By:

_____

_____

_____

_____

SURETY

By:

_____

Print Name:

Countersigned by Resident Commission Agent as required by Chapter 515 of the Code of Iowa. (Required only if Attorney-in-Fact is not also an Iowa Resident Commission Agent)

By:

_____

If a partnership all partners must sign.

This bond approved by the Division of Soil Conservation and Water Quality, Iowa Department of Agriculture and Land Stewardship this _____ day of _____, 20_____.

By:

_____

Grant D. Menke, Deputy Director
Iowa Department of Agriculture and Land Stewardship

END OF DOCUMENT NN

CONSTRUCTION SPECIFICATIONS

SUPPLEMENTAL MEASUREMENT PAYMENT / ITEMS OF
WORK AND CONSTRUCTION DETAILS
FOR
KRACHT WETLAND SITE
IDALS PROJECT NO. CLA953734C
CLAY COUNTY, IOWA

BMI PROJECT NO. 25X.140338.000

LICENSED PROFESSIONAL ENGINEER BRANDON C. SHORT 29449 IOWA	I hereby certify that this engineering document was prepared by me or under my direct supervision and that I am a duly licensed Professional Engineer under the laws of the State of Iowa. (Signature)_____ (Date) 06/10/2026 Printed or typed name: Brandon C. Short, PE My renewal date is: December 31, 2026 License Number is: 29449 Pages or sheets covered by this seal: Full Document

© Bolton & Menk, Inc. 2025, All Rights Reserved

CONSTRUCTION SPECIFICATIONS

FOR

CLA953734C Break Point Wetland
Clay County, Iowa

List of Specifications

Specification Number	Title	Pages
001	SITE PREPARATION	3-4
005	POLLUTION CONTROL	5-6
006	SEEDING AND MULCHING FOR PROTECTIVE COVER	7-10
008	MOBILIZATION AND DEMOBILIZATION	11-12
	STANDARD DETAIL FOR SIGN INSTALLATION	13
009	SUBSURFACE DRAIN INVESTIGATION, REMOVAL, AND REPAIR	14-17
011	REMOVAL OF WATER	18-19
013	SHEET PILING	20-21
021	EXCAVATION	22-24
023	EARTHFILL	25-28
024	DRAINFILL	29-31
026	TOPSOIL	32-33
031	CONCRETE	34-40
046	TILE DRAINS FOR LAND DRAINAGE	41-44
051	CORRUGATED METAL PIPE CONDUITS	45-47
061	LOOSE ROCK RIPRAP	48-49
062	CONCRETE GROUT FOR RIPRAP	50-52

These specifications are part of the construction plans. The work shall be performed in accordance with the drawings and specifications unless otherwise approved, in writing, by the engineer. For items of work requiring engineer inspection, it is the responsibility of the contractor to keep the engineer informed of the progress of work so that timely inspections may be performed. Work installed without engineer inspection will not be certified as meeting NRCS standards. For references to SUDAS, see https://www.iowasudas.org/manuals/specifications-manual/

Construction Specification
000 IA CS-00-1 Site Preparation

1. SCOPE

Site preparation work shall consist of clearing, grubbing, stripping, refuse removal, bank sloping and structure removal on the site as necessary to rid the site of all undesirable materials on or near the surface and prepare the site for the structure. All woody growth within the construction area shall be cleared and all stumps and roots one inch in diameter or larger shall be grubbed from the site. In addition, all areas within 25 feet of the footprint of the structure shall be cleared and grubbed except as directed by NRCS. The work shall also consist of the removal and disposal of structures (including fences) that must be removed to perform other items of work.

For wetland restoration, enhancement, or creation projects, the wetland area shall be disturbed as little as possible and existing naturally vegetated spillway areas shall not be disturbed.

2. FOUNDATION PREPARATION

The construction areas shall be stripped a minimum of 6 inches to remove all unsuitable materials such as organic matter, grasses, weeds, sod, debris, and stones larger than 6 inches in diameter.

In an earth embankment foundation area, all channel banks and sharp breaks shall be sloped to no steeper than 1.5 horizontal to 1 vertical.

The foundation area shall be thoroughly scarified before placement of fill material. The surface shall have moisture added or shall be compacted if necessary so that the first layer of fill material can be compacted and bonded to the foundation.

3. STRIPPED MATERIAL DISPOSAL

Suitable soil material shall be stockpiled for use as topsoil. The other stripped materials shall be buried, removed from the site, or disposed of as directed by the owner or NRCS. Whenever possible, material shall not be disposed of in the pool area created by the structure.

Stockpiled materials around a construction site should be placed so as not to hinder subsequent construction operations.

4. DISPOSAL OF REFUSE MATERIALS

Waste materials from clearing and structure removal shall be burned or buried at locations approved by the owner. Buried materials shall be covered with a minimum of 2 feet of earthfill. Whenever possible, material shall not be disposed of in any pool area created by the structure.

All refuse shall be disposed of in a manner which complies with all local and state regulations.

5. SALVAGE

Items to be salvaged shall be as shown on the drawings. Structures and fencing materials that are designated to be salvaged shall be carefully removed and neatly placed in the specified storage areas.

6. SPECIFIC SITE REQUIREMENTS

A. Measurement and Payment

Compensation for any work item described in the contract documents but not listed in the bid schedule will be included in the payment for the item of work to which it is made subsidiary. Such items and bid items to which they are made subsidiary are identified in Items of Work and Construction Details section of this specification.
For items of work which lump sum prices are established in the contract, the quantity of work will not be measured for payment. Payment for each item will be made at the contract lump sum price and will constitute full compensation for completion of the work.

For items of work for which specific unit prices are established in the contract, the payment will be made based on the approved quantity measured by the engineer or weight tickets. Payment will constitute full compensation of the work completed as defined by each work item.

B. Items of Work and Construction Details

1. Bid Item No. 1 – Site Stripping and Preparation

This item will consist of work to remove and dispose of existing vegetation and other unwanted material on areas to be excavated or filled. Total depth of vegetative stripping and topsoil stripping shall equal a combined depth of 12", with the estimated cubic yards of top soil removal as shown in the plans. The topsoil stripping and replacement quantity shall be paid separately.

This item will also include any tree and brush removal, fence removal if applicable, the removal of the existing grade control structure and associated rubble and debris, and the removal of the livestock shelter as shown on the plans. These shall be considered incidental to site stripping.

This item will be paid as a lump sum.

2. Bid item No. 2 – Crop Damage

This item consists of crop damage that results from construction activities. It is recommended contractor remove corn residue rather than knock it down.

Payment for crop damage will be made to the nearest 0.1 acre as measured by the Engineer or their representative. The unit rate for crop damage will be determined by the Division near the completion of construction and added to the contract with a Change Order. Payment will be made to contractor who will pay landowner.

Construction Specification
000 IA CS-005 Pollution Control 2011

1. SCOPE

The work shall consist of installing measures or performing work to control erosion and minimize the production of sediment and other pollutants to water and air during construction operations.

2. MATERIALS

All materials furnished shall meet the requirements shown on the drawings or in the specifications.

3. EROSION AND SEDIMENT CONTROL MEASURES AND WORKS

The measures and works shall include, but are not limited to, the following:

Staging of Earthwork Activities: The excavation and moving of soil materials shall be scheduled so that areas unprotected from erosion will be minimized. These areas will be unprotected for the shortest time feasible.

Seeding: Structures and disturbed areas shall be seeded as soon as possible after construction is completed. Temporary seedings may be used as an alternative to other stabilization measures as approved by NRCS.

Mulching: Construction areas that have been disturbed but have no construction activity scheduled for 21 days or more shall have erosion protection measures applied by the 14th day. This erosion protection may be mulching or other approved temporary measures. Construction areas shall not be left open during a winter shutdown period and shall be protected by mulching.

All seeding and mulching shall be completed in accordance with the seeding plan and Iowa Construction Specification IA-6, Seeding and Mulching for Protective Cover.

The following works may be temporary. If they are installed as a temporary measure, they shall be removed and the area restored to its original state when they are no longer needed or when permanent measures are installed.

Diversions: Diversions may be required to divert clean runoff water away from work areas and to collect runoff from work areas for treatment and safe disposition.

Stream Crossings: Culverts or bridges may be required where construction equipment must cross streams.

Sediment Basins: Sediment basins may be required to settle and filter out sediment from eroding areas to protect properties and streams below the construction site.

Sediment Filters: Straw bale filters, geotextile sediment fences, or other equivalent methods may be used to trap sediment from areas of limited runoff. Sediment filters shall be properly anchored to prevent erosion under them.

Waterways: Waterways may be required for the safe removal of runoff from fields, diversions, and other structures or measures

4. CHEMICAL POLLUTION

The Contractor shall provide watertight tanks or barrels or construct a sump sealed with plastic sheets to be used to dispose of chemical pollutants, such as drained lubricating or transmission oils, greases, soaps, concrete mixer wash water, asphalt, etc., produced as a by-product of the construction work.

At the completion of the construction work, sumps shall be removed and the area restored without causing pollution.

Sanitary facilities such as chemical toilets or septic tanks shall not be placed adjacent to live streams, wells, or springs. They shall be located at a distance sufficient to prevent contamination of any water sources. At the completion of construction work, facilities shall be disposed of without causing pollution.

5. AIR POLLUTION

The burning of brush or trash or disposal of other materials shall adhere to local and state regulations.

Fire prevention measures shall be taken to prevent the start or the spreading of wild fires, which result from project work. Fire breaks or guards shall be constructed at locations shown on the drawings.

All public access or haul roads used by the contractor during construction of the project shall be sprinkled or otherwise treated to fully suppress dust. All dust control methods shall ensure safe operations at all times. If chemical dust suppressants are used, the material shall be a commercially available product specifically designed for dust suppression and the application shall follow manufacturer's requirements and recommendations. A copy of the product data sheet and manufacturer's recommended application procedures shall be provided to the Engineer five working days before use.

6. MAINTENANCE, REMOVAL, AND RESTORATION

All pollution control measures and works shall be adequately maintained in a functional condition as long as needed during the construction operation. All temporary measures shall be removed and the site restored to as near original conditions as practical.

7. SPECIFIC SITE REQUIREMENTS

A. Measurement and Payment

Compensation for any work item described in the contract documents but not listed in the bid schedule will be included in the payment for the item of work to which it is made subsidiary. Such items and bid items to which they are made subsidiary are identified in Items of Work and Construction Details section of this specification.

For items of work which lump sum prices are established in the contract, the quantity of work will not be measured for payment. Payment for each item will be made at the contract lump sum price and will constitute full compensation for completion of the work.

For items of work for which specific unit prices are established in the contract, the payment will be made based on the approved quantity measured by the engineer or weight tickets. Payment will constitute full compensation of the work completed as defined by each work item.

B. Items of Work and Construction Details

1. Subsidiary Item - Pollution Control

This item shall consist of applying and performing all construction activities in a manner that will minimize water pollution, air pollution and soil erosion. No separate payment will be made for Pollution Control. Compensation for this item will be other items as appropriate.

Construction Specification
000 IA-6 Seeding and Mulching for Protective Cover

1. SCOPE

The work shall consist of seeding, mulching, and fertilizing all disturbed areas and other areas as indicated on the drawings or otherwise designated.

2. SEEDBED PREPARATION AND APPLICATION

The entire area to be seeded shall be reasonably smooth and all washes and gullies shall be filled to conform to the desired cross-section before actual seedbed preparation is begun. At this stage of the operation, the required fertilizer and lime shall be applied uniformly and incorporated into the top 3 inches of the soil with suitable tillage equipment. The seedbed preparation operation shall be suspended when the soil is too wet or too dry. The seedbed shall be loosened to a depth of at least three inches.

On side slopes steeper than 2-1/2 horizontal to1 vertical, the 3 inch minimum depth of seedbed preparation is not required, but the soil shall be worked enough to insure sufficient loose soil to provide adequate seed cover.

Unless otherwise specified, the seeding operation shall be performed immediately after preparation of the seedbed. The seed shall be drilled or broadcast by equipment that will insure uniform distribution of the seed.

3. MATERIALS

The seeding, fertilizing, and mulching requirements are as specified on Form IA-CPA-4.

Straw from cereal grains or hay will be used as mulching material. It shall be relatively free of weeds.

4. MULCH APPLICATION

The required mulching shall be performed as soon as possible after seeding unless otherwise specified. The mulch shall be applied uniformly over the area. The type and rate shall be as specified. When mulching is required, all areas seeded during any one day shall be mulched within 24 hours. The mulch may be spread by any means that results in a uniform cover.

The mulch shall be anchored. Anchoring of the mulch may be performed by a mulch anchoring tool or regular farm disk weighted and set nearly straight, by installation of mulch netting, or by other methods approved by NRCS.

5. SPECIFIC SITE REQUIREMENTS

A. Measurement and Payment

Compensation for any work item described in the contract documents but not listed in the bid schedule will be included in the payment for the item of work to which it is made subsidiary. Such items and bid items to which they are made subsidiary are identified in Items of Work and Construction Details section of this specification.

For items of work which lump sum prices are established in the contract, the quantity of work will not be measured for payment. Payment for each item will be made at the contract lump sum price and will constitute full compensation for completion of the work.

For items of work for which specific unit prices are established in the contract, the payment will be made based on the approved quantity measured by the engineer or weight tickets. Payment will constitute full compensation of the work completed as defined by each work item.

B. Items of Work and Construction Details

1. Bid Item No. 3 – Structure & Channel Seeding

This item will consist of seeding the embankment and wave berm, auxiliary spillway, areas of the outlet channel not covered by rip rap, the tile main cover berm, the pool excavation side slopes to one foot below the normal pool elevation, and any other disturbed areas noted on the plans or as determined by the engineer.

All seed must be clean and weed free. Seeding rates are expressed in bulk pounds per acre. Seed quality shall not drop below 70% Pure Live Seed (PLS) where PLS = (percent germination plus percent dormant seed) times percent purity.

Seeding rates are as follows:

Smooth Brome grass	25 pounds/acre

Seed shall be applied with a drill and placed at ¼ to ½ inch deep.

Fertilizer shall be applied on the entire seeding area at the following rate:

Nitrogen (N)	30 pound/acre
Phosphorus (P_2O_5)	30 pounds/acre
Potassium (K_2O)	40 pounds/acre

Straw mulch shall be applied at a rate of 2 tons per acre on all areas receiving structure and channel seeding.

Seeding shall be completed during the following seeding periods:

Spring	March 1 to May 15
Summer	August 1 to September 15
Fall	November 15 to Freeze-up

If construction is completed during any other time of the year, the seeding shall be performed at the next seeding period.

If seeding is completed during the spring seeding period, a companion crop of oats shall be seeded at a rate of 1-1/2 bushels per acre.

Measurement will be based on the areas successfully seeded to the nearest 0.1 acre.

2. Bid Item No. 4 – Buffer Seeding

This item will consist of seeding the areas designated on the plans as buffer seeding and include borrow and spoil areas, disturbed areas not seeded as part of structural seeding, and

other areas within the easement. Buffer seeding is not required in area below normal pool elevation established by the weir elevation.

Some areas of the site may have existing CRP vegetation or steep slopes with existing vegetation. Local NRCS personnel will determine if these areas will be included as part of the buffer seeding areas for this project or will be left as is. This may affect the bid quantity and Contractor will verify with Engineer the number of acres that will require buffer seeding.

All seed must be clean and weed free. Seeding rates are expressed in pounds of pure live seed per acre. All seed must be yellow-tagged Iowa ecotype unless approved otherwise by IDALS-DSCWQ.

Seeding mixture shall include a minimum of 5 native grasses and 10 native forbs. The mixture shall provide a minimum of 30 grass seeds per square foot and 10 forbs seeds per square foot. Number of seeds will be based on Iowa Conservation Practice 327 "Native Species for Wildlife". Contractor's proposed seed mix shall be submitted to Engineer and local NRCS office for approval at least 2 weeks before seed is to be applied.

Seeding shall be completed during the following seeding periods:

Spring	April 1 to June 30
Fall	November 15 to Freeze-up

The seed bed shall be properly prepared prior to seeding:

(a) Any weed control measures shall be completed prior to seeding. If spraying is used, then a span of two weeks shall be allowed between spraying and seeding.
(b) If the land was in soybeans, no additional tillage is required. If the land was in corn or other vegetation, areas to be seeded shall be disked to thoroughly loosen and pulverize the soil to a depth of 3 inches. This may require multiple passes of equipment. If the land was used for pasture and has a smooth surface, the preparation in non-disturbed areas to be seeded shall include mowing any vegetation taller than 12 inches and applying an appropriate herbicide at the labeled rates to emergent growth 2 to 4 weeks after mowing. After the vegetation has died, the area shall be disked thoroughly loosen and pulverize the soil depth of 3 inches. If emergent growth occurs prior to seeding, the areas shall receive a second application of herbicide. Seeding shall not occur until the existing vegetation has died (about 1 week).
(c) If deeper disking is used at the site, a lighter disk or spring harrow shall be used to remove deep furrows.
(d) After disking operations and prior to seed application, the seedbed shall be firmed with a cultipacker or similar piece of equipment.
(e) No lime or fertilizer is to be applied.

Sow seed with contour using a grassland or rangeland drill set for the specified seeding rates. The drill shall be equipped with double coulter furrow openers. The drill shall be subject to acceptance by Engineer. Overlap each successive seeding pass to ensure complete coverage.

Plant seed not more than 1/4 inch deep; some seed may be seen on the surface after seeding.

Broadcasting by centrifugal-type or hydroseeder broadcasters, or by hand shall be allowed in areas not accessible to drills or other equipment. Once broadcast, the seed must be covered with soil to a depth no greater than 1/4 inch by means of hand rakes or other approved methods.

Upon completion of the seeding operation, cultipack the seedbed to provide a positive seed-soil contact. If the drill seeder is equipped with an approved cultipacker or press wheels, separate operations shall not be necessary. The type of cultipacker/seeder to be used shall be subject to acceptance by Engineer.

No mulch shall be required.

Measurement will be based on the area successfully seeded and measured to the nearest 0.1 acre.

3. Weed Control (Not a Bid item)

Weed control may be needed in portions of this site depending upon the start date of the contract, the initiation of grading, and the seeding dates.

Weed control will be added to the contract with a change order to be negotiated between Contractor and Division based on conditions observed and the type of weed control used and will be paid only once. If delays require additional weed control, this will be paid for at Contractor's own expense.

Weed control may include placement of a cover crop such as oats or rye, spraying with appropriate chemicals, or disking. If thistles are present, only spraying is allowed for weed control and shall include appropriate chemicals designed to control thistles.

NATURAL RESOURCES CONSERVATION SERVICE
CONSTRUCTION SPECIFICATION

Construction Specification 8—Mobilization and Demobilization

1. SCOPE

The work consists of the mobilization and demobilization of the contractor's forces and equipment necessary for performing the work required under the contract. It does not include mobilization and demobilization for specific items of work for which payment is provided elsewhere in the contract. Mobilization will not be considered as work in fulfilling the contract requirements for commencement of work.

2. EQUIPMENT AND MATERIAL

Mobilization shall include all activities and associated costs for transportation of contractor's personnel, equipment, and operating supplies to the site; establishment of offices, buildings, and other necessary general facilities for the contractor's operations at the site; premiums paid for performance and payment bonds including coinsurance and reinsurance agreements as applicable; and other items specified in section 4 of this specification.

Demobilization shall include all activities and costs for transportation of personnel, equipment, and supplies not required or included in the contract from the site; including the disassembly, removal, and site cleanup of offices, buildings, and other facilities assembled on the site specifically for this contract.

This work includes mobilization and demobilization required by the contract at the time of award. If additional mobilization and demobilization activities and costs are required during the performance of the contract as a result of changed, deleted, or added items of work for which the contractor is entitled to an adjustment in contract price, compensation for such costs will be included in the price adjustment for the item or items of work changed or added.

3. PAYMENT

Payment will be made as the work proceeds, after presentation of paid invoices or documentation of direct costs by the contractor showing specific mobilization and demobilization costs and supporting evidence of the charges of suppliers, subcontractors, and others. When the total of such payments is less than the lump sum contract price, the balance remaining will be included in the final contract payment. Payment of the lump sum contract price for mobilization and demobilization will constitute full compensation for completion of the work.

Payment will not be made under this item for the purchase costs of materials having a residual value, the purchase costs of materials to be incorporated in the project, or the purchase costs of operating supplies.

4. ITEMS OF WORK AND CONSTRUCTION DETAILS

A. Measurement and Payment

Compensation for any work item described in the contract documents but not listed in the bid schedule will be included in the payment for the item of work to which it is made subsidiary. Such items and bid items to which they are made subsidiary are identified in Items of Work and Construction Details section of this specification.

For items of work which lump sum prices are established in the contract, the quantity of work will not be measured for payment. Payment for each item will be made at the contract lump sum price and will constitute full compensation for completion of the work.

For items of work for which specific unit prices are established in the contract, the payment will be made based on the approved quantity measured by the engineer or weight tickets. Payment will constitute full compensation of the work completed as defined by each work item.

B. Items of Work and Construction Details

1. Bid Item No. 5 – Mobilization and Demobilization

This item shall consist of mobilizing and demobilizing personnel and equipment in preparation to perform the work within the scope of this contract.

Any work that is necessary to provide access to the site including, but not limited to, grading, temporary culverts, and clearing will be included in this item. When construction is completed access areas will be restored, as close as practical, to its original condition.

Any fence removed for access and /or to provide work area shall be replaced with same or like materials as approved by the engineer.

The Contractor shall exercise caution to minimize the amount of damage caused by the grading and clearing operations.

Portable toilets shall be provided at the construction site and used for the sanitary facilities.

This item shall not include transportation of personnel, equipment and operating supplies within the work limits areas of this contract.

Payment will constitute full compensation for related subsidiary item, Pollution Control.

Payment will be made as the work proceeds and will paid out on the percent of the project complete as the work progresses. Payment of the lump sum contract price for mobilization and demobilization will constitute full compensation for the completion of the work.

Contractor is to contact “Iowa One Call” for utility locations a minimum of two (2) days prior to any excavation/construction. The ticket number must be provided to Engineer.

2. Subsidiary Item – Sign Installation

This item shall include all labor, materials, equipment and Iowa One Call notifications to install sign provided by Iowa Department of Agriculture and Land Stewardship, as shown on the plans or on next page.

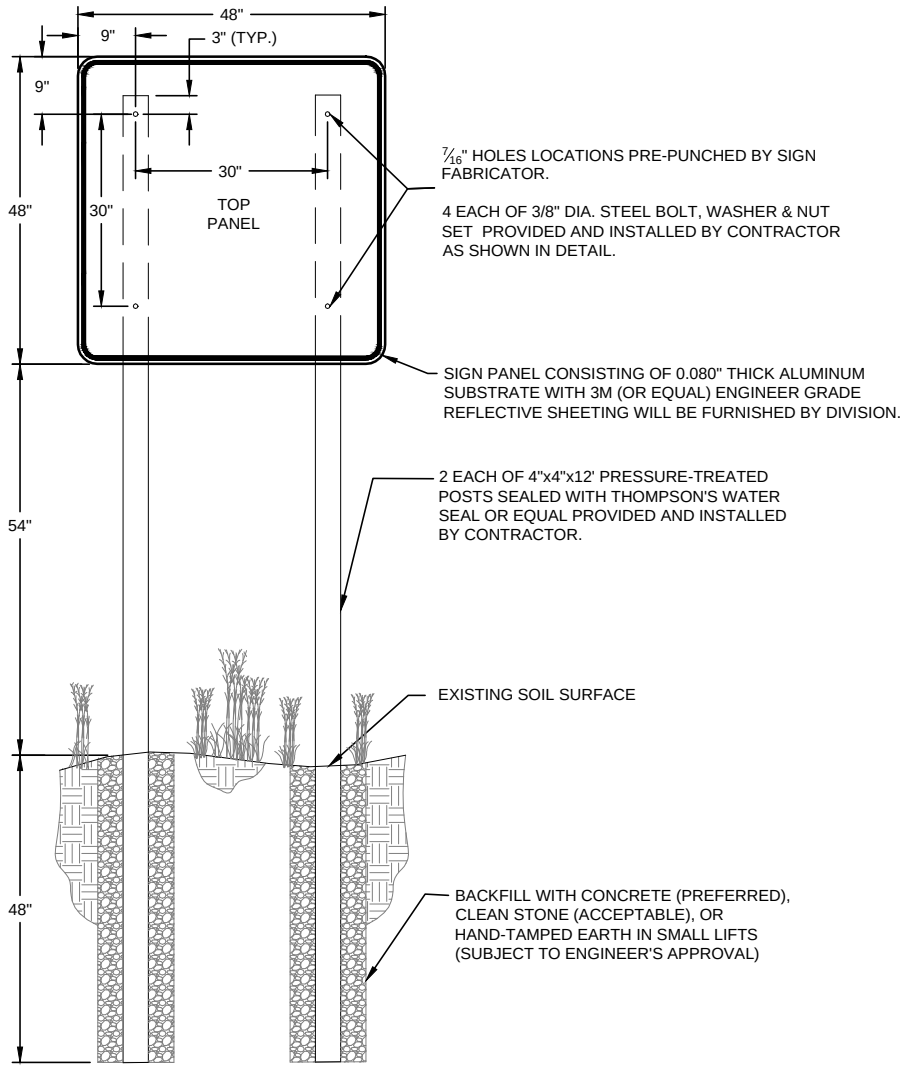

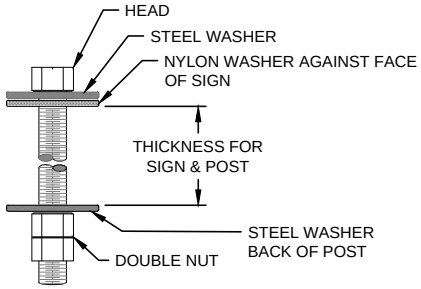

BOLT, WASHER, & NUT FASTENER DETAIL

NOT TO SCALE

SIGNAGE NOTES:

1. DIVISION WILL FURNISH SIGN PANEL. CONTRACTOR IS RESPONSIBLE FOR PROVIDING POSTS, HARDWARE, AND INSTALLATION .

2. ALL EXPOSED WOOD SHALL BE SEALED WITH THOMPSON'S WATER SEAL OR EQUAL MEETING ASTM D-4446-08.

3. ALL STEEL HARDWARE PIECES SHALL BE GALVANIZED OR RUST RESISTANT.

4. NYLON AND STEEL WASHERS SHALL BE USED AS SHOWN ON THE BOLT, WASHER, NUT FASTENER DETAIL ABOVE.

5. CLEAR UTILITIES WITH IOWA ONE-CALL AT 811 OR (800) 292-8989 BEFORE EXCAVATING FOR POSTS.

6. SECURE DIVISION AND LANDOWNERS APPROVAL FOR SIGN LOCATION BEFORE INSTALLATION.

7. COSTS FOR POSTS, HARDWARE, WOOD SEALANT AND SIGN INSTALLATION SHALL BE INCIDENTAL TO MOBILIZATION.

8. CONTRACTOR SHALL INSTALL SIGN POSTS USING A PLYWOOD OR OTHER SUITABLE TEMPLATE TO MAINTAIN ACCURATE POST SPACING AND ALIGNMENT DURING BACKFILLING OF THE POST HOLES. TO AVOID BENDING OF THE SIGN PANELS, POSTS SHALL NOT BE INSTALLED OR BACKFILLED WITH SIGN PANELS ATTACHED.

9. ONE (1) PROJECT SIGN SHALL BE INSTALLED UNLESS NOTED OTHERWISE.

STANDARD DETAIL FOR SIGN INSTALLATION

DIVISION OF SOIL CONSERVATION AND WATER QUALITY

NATURAL RESOURCES CONSERVATION SERVICE
CONSTRUCTION SPECIFICATION

IA-9 SUBSURFACE DRAIN INVESTIGATION, REMOVAL, AND REPAIR

1. SCOPE

The work shall consist of investigation, location, repair, and/or removal of subsurface drains (tile) near new or existing animal waste storage facilities or in wetland restoration, enhancement, or creation project areas, or other situations where subsurface drains may be present.

2. INVESTIGATION AND LOCATION

An inspection trench at least 10 inches wide shall be dug at the location shown on the drawings or as directed by the engineer or his representative. The trench shall be at least 6 feet deep measured from the original ground line, unless otherwise shown on the plans. The Engineer or his representative shall examine the trench and excavated material to identify tile lines.

Size, material, operating condition and direction of flow of each conduit shall be documented. Location and flow line elevation of each conduit shall be surveyed with horizontal and vertical control based on benchmarks shown on the plans.

The inspection trench shall be documented by surveying the natural ground and trench bottom location and elevations at the beginning, end, and every 50 feet for trenches longer than 50 feet.

Backfilling shall not be started without approval of the Engineer. See Section 5 for backfill specifications.

Trench shields, shoring and bracing, or other methods necessary to safeguard the workers and work, and to prevent damage to the existing improvements shall be furnished, placed, and subsequently removed by the contractor.

3. TILE REPAIR

Unless designated for removal, replace damaged conduit with new conduit having equal or greater capacity using material specified in Section 6 or 7. When replacing short sections of clay or concrete tile with single-wall corrugated polyethylene pipe, use the next larger nominal size.

Make connections with manufactured fittings and tight joints. Where joints have gaps that would allow soil to enter, cover the joint with a permanent type material such as coal tar pitch treated roofing paper, fiber glass sheet or mat, or plastic sheet.

If the investigation trench has been excavated below the existing drain grade, backfill the trench with gravel or well-pulverized soil in layers not over four (4) inches thick and tamp by hand or manually directed power tamper to provide a firm foundation for the conduit at the existing grade. Do not backfill with any soil containing broken tile fragments.

Using selected soil free of hard clods, rocks, or frozen soil, hand tamp the backfill material around the haunch of the pipe in layers not over four (4) inches thick to provide support. Hold the conduit in place

mechanically while placing excavated material around and over the conduit to ensure proper alignment and grade is maintained. Complete the backfill operation according to Section 5.

4. TILE REMOVAL

Remove conduits as shown on the plans or directed by the Engineer or his representative, including envelope filter material or other flow enhancing material when present.

Cap or plug the open ends of the disconnected conduit to prevent soil entry when the conduit will continue to function downstream, or otherwise shown on the plans. For a minimum distance of two feet around each sealed conduit end, backfill in layers not over four (4) inches thick and tamp by hand or manually directed power tamper to a density equal to or greater than the surrounding undisturbed soil. Do not backfill with any soil containing broken tile fragments, large stones, frozen material, or large dry clods.

Where tile are located beneath an existing animal waste facility, remove the tile or fill the entire length of tile with concrete or Portland cement grout as shown on the plans. When tile removal is specified, the owner shall contact the Iowa Department of Natural Resources (IDNR) for permission to remove the drainage tile under the structure. The structure shall be emptied of waste or lowered to a point below the tile prior to its removal. The structure must be retested for percolation and the results submitted to IDNR and approval received prior to reusing the structure.

If shown on the plans or directed by the engineer, reroute upstream drain lines so the capacity of the upstream drainage system is maintained. Install conduit in accordance with Iowa Construction Specification IA-46, Tile Drains for Land Drainage.

5. BACKFILL

Compact soil around disturbed tile as specified in Section 3 (Tile Repair) and Section 4 (Tile Removal). Keep the backfill within 5 feet of the conduit free from large stones, frozen material, and large dry clods. Unless otherwise shown on the plans, backfill the remainder of the trench as follows:

For trenches located under or near structures, backfill in 12-inch layers and compact each layer to a density equal to or greater than the surrounding undisturbed soil.

For other locations, backfill the remainder of each trench with the excavated soil material which shall extend above the ground surface and be well rounded over the trench.

6. MATERIALS

Unless otherwise shown on the plans, conduit and fittings used for repair shall conform to the specifications listed in Table 1. Perforated pipe shall have a water inlet area of at least 1 square inch per foot, provided by perforations spaced uniformly along the long axis of the pipe. The perforations shall be circular or slots. Circular perforations shall not exceed 3/16 inch in diameter. Slots shall not be more than 1/8 inch wide.

Table 1. Acceptable pipe for subsurface drain repair

Kind of Pipe[#]	Specification
Corrugated Polyethylene (PE) Pipe and Fittings, 3 to 6 inch	ASTM F 405
Corrugated Polyethylene (PE) Pipe and Fittings, 3 to 24 inch	ASTM F 667
Corrugated Profile Wall (Dual Wall) Polyethylene (PE) pipe, 2 to 60 inch	ASTM F 2648[$]
Corrugated Profile Wall (Dual Wall) Polyethylene (PE) pipe, 12 to 60 inch	ASTM F 2306[$]
Polyvinyl Chloride (PVC) Plastic Pipe, Schedules 40, 80 and 120	ASTM D 1785
PVC Pressure-Rated Pipe (SDR Series)	ASTM D 2241
Clay drain tile	ASTM C 4
Concrete drain tile	ASTM C 412

[#]Pipe sizes are nominal and the ranges are inclusive

[$]Pipe conforming to AASHTO M 252 (3 to 10 inch), or AASHTO M 294 (12 to 60 inch) is acceptable.

7. SPECIFIC SITE REQUIREMENTS

A. Measurement and Payment

Compensation for any work item described in the contract documents but not listed in the bid schedule will be included in the payment for the item of work to which it is made subsidiary. Such items and bid items to which they are made subsidiary are identified in Items of Work and Construction Details section of this specification.

For items of work which lump sum prices are established in the contract, the quantity of work will not be measured for payment. Payment for each item will be made at the contract lump sum price and will constitute full compensation for completion of the work.

For items of work for which specific unit prices are established in the contract, the payment will be made based on the approved quantity measured by the engineer or weight tickets. Payment will constitute full compensation of the work completed as defined by each work item.

B. Items of Work and Construction Details

1. Bid Item No. 6a – Tile Removal

This item will consist of the excavation necessary to locate and remove all tile under the embankment and to locate and determine the tie-in locations for the tile locations shown on the plans. All tile shall be removed within 30 feet of the embankment. This item shall also include backfilling of the trenches.

This item does not include the additional excavation required to excavate the embankment core trench, if included in the project. Excavation of the core trench is covered under Specification IA-21, Excavation.

The extent of the tile investigation shall be as shown on the drawings. If extra work is required to locate additional tile not shown on the drawings, the Contractor can request additional compensation, but it must be first approved by the Division.

The investigation should reveal where the tile crosses the embankment footprint or where it is located if it does not cross the embankment footprint

Payment for Drainage Tile Investigation and removal shall be made on an hourly basis. The Contractor shall notify the engineer when tile investigation is being performed.

2. Bid Item No. 6b – Tile Abandonment

This item will consist of abandonment in place of the existing tile under the road as shown in the plans. The tile shall be filled with grout. The extent shall be from the bottom of the ditch on one side of the road to the bottom of the ditch on the other side. Outside of this area the tile shall be removed under bid item No. 6a.

Construction Specification
000 IA-11 Removal of Water

1. SCOPE

The work shall consist of the removal of surface water and ground water as needed to perform the required construction in accordance with the plans and specifications.

2. DIVERTING SURFACE WATER

The Contractor shall build, maintain and operate all cofferdams, channels, diversions, flumes, sumps, and other temporary protective works needed to divert surface water away from the construction site while construction is in progress.

3. DEWATERING THE CONSTRUCTION SITE

Foundations, cutoff trenches, borrow areas and other parts of the construction site shall be dewatered as needed for proper execution of the construction work. The Contractor shall furnish, install, operate and maintain all works and equipment needed to perform the dewatering.

4. EROSION AND POLLUTION CONTROL

Removal of water from the construction site, including the borrow areas shall be accomplished in such a manner that erosion and the transmission of sediment and other pollutants are minimized.

5. REMOVAL OF TEMPORARY WORKS

After temporary works have served their purposes and before the Contractor leaves the site, they shall be removed.

6. SPECIFIC SITE REQUIREMENTS

A. Measurement and Payment

Compensation for any work item described in the contract documents but not listed in the bid schedule will be included in the payment for the item of work to which it is made subsidiary. Such items and bid items to which they are made subsidiary are identified in Items of Work and Construction Details section of this specification.

For items of work which lump sum prices are established in the contract, the quantity of work will not be measured for payment. Payment for each item will be made at the contract lump sum price and will constitute full compensation for completion of the work.

For items of work for which specific unit prices are established in the contract, the payment will be made based on the approved quantity measured by the engineer or weight tickets. Payment will constitute full compensation of the work completed as defined by each work item.

B. Items of Work and Construction Details

1. Subsidiary Item - Dewatering

This item shall include all costs to divert, pump, dam or other means to dewater the site as needed to complete construction activities.

No separate payment will be made for Removal of Water. Compensation for this item shall be made subsidiary to other bid items requiring removal of water in order to complete.

Construction Specification
000 IA-13 Sheet Piling

1. SCOPE

The work shall consist of furnishing and driving the specified sheet piling at the location shown on the drawings.

2. MATERIALS

Sheet piling shall conform to the requirements of ASTM A328 (Steel Sheet Piling), A572 (High- Strength Low-Alloy Columbium-Vanadium Structural Steel), or A690 (High-Strength Low-Alloy steel H-Piles and Sheet Piling for Use in Marine Environments). The sheet piling provided shall meet the required cross-section, section modulus, thickness, and steel grade shown on the drawings. Fabrication of sheet piles from shorter lengths of pile stock is not permitted.

3. DRIVING SHEET PILE

The piling shall be driven in a manner so as to insure perfect interlocking throughout the entire length of each pile. The piles shall be held in proper alignment during driving by means of suitable temporary guide structures which shall be removed when they have served their purpose.

Piling shall be driven to the full depth shown on the drawings unless otherwise approved by the engineer.

4. CUTTING OFF PILES

The contractor shall cut the piling off at the specified elevations. Piling length shall be sufficient to permit removal of all materials damaged by driving.

5. DEFECTIVE PILING

Any piling damaged in driving, driven out of its proper location, driven below the specified cut off elevation, or inaccurately cut off shall be pulled and replaced or re-driven. Any piling ruptured in the interlock or otherwise damaged during driving shall be pulled and replaced.

6. SPECIFIC SITE REQUIREMENTS

A. Measurement and Payment

Compensation for any work item described in the contract documents but not listed in the bid schedule will be included in the payment for the item of work to which it is made subsidiary. Such items and bid items to which they are made subsidiary are identified in Items of Work and Construction Details section of this specification.

For items of work which lump sum prices are established in the contract, the quantity of work will not be measured for payment. Payment for each item will be made at the contract lump sum price and will constitute full compensation for completion of the work.

For items of work for which specific unit prices are established in the contract, the payment will be made based on the approved quantity measured by the engineer or weight tickets. Payment will constitute full compensation of the work completed as defined by each work item.

B. Items of Work and Construction Details

1. Bid Item No. 7 – Steel Sheet Piling

Payment will be made based on the submitted unit price based on the area of sheet pile walls, acceptably placed, computed to the nearest square foot within the neat lines shown on the drawings. Payment will be made at the contract unit price for each type, kind and weight of piling. Such payment will constitute full payment for all labor, materials, equipment and all other items necessary and incidental to the completion of the work.

This item shall consist of furnishing and installing the steel sheet piling shown on the drawings. This item shall include field cutting the side slopes of the sheet piling to the specified slope shown on the drawings along with any damaged portion from driving.

The sheet piling will be installed starting from the center of the weir section and progressing away from centerline. Sheets shall be driven together, a few feet at a time, so that no sheet is driven to full depth before adjacent sheets are started.

The sheet pile minimum requirements have been determined for in-place stresses. The Contractor is responsible for making sure the sheet pile provided can be adequately placed without excessive damage based on expected stresses experienced during placement.

2. Subsidiary Item: Steel c-channel

Furnishing and Installation the steel c-channel (See IA-81), including bolts, nuts, washers and steel channel.

All holes shall be field drilled. Torch, plasma cutting or other methods resulting in imperfect holes will not be permitted.

Construction Specification
000 IA-21 Excavation

1. SCOPE

The work shall consist of the excavation required by the drawings and specifications and disposal of the excavated materials. The cutoff trench and any other required excavations shall be dug to the lines and grades shown on the drawings or as staked in the field. Structure or trench excavations will conform to all safety requirements of OSHA.

2. USE OF EXCAVATED MATERIALS

Suitable materials from the specified excavations shall be used in the construction of required permanent earth fill. The suitability of materials for specific purposes shall be determined by the NRCS Inspector.

3. DISPOSAL OF WASTE MATERIAL

All surplus or waste material shall be disposed of in areas shown on the drawings or as approved by the NRCS Inspector. The waste material shall be smoothed and sloped to provide drainage.

4. STRUCTURE AND TRENCH EXCAVATION

Structure or trench excavations will conform to all safety requirements of OSHA.

5. BORROW EXCAVATION

When the quantities of suitable materials obtained from specified excavations are insufficient to construct the specified fills, additional materials shall be obtained from the designated borrow areas as shown on the drawings or as approved by NRCS and the landowner. On wetland projects, borrow shall not be taken from the wetland area within 10 feet of the embankment or as shown on the drawings.

Borrow areas shall be excavated and grading completed in a manner to eliminate steep or unstable side slopes or hazardous or unsightly conditions.

6. OVER-EXCAVATION

Excavation beyond the specified lines and grades shall be corrected by filling the resulting voids with compacted earthfill, except that if the earth is to become the subgrade for riprap, sand or gravel bedding or drainfill, the voids shall be filled with material conforming to the specifications for the riprap, bedding or drainfill, as appropriate.

7. SPECIFIC SITE REQUIREMENTS

A. Measurement and Payment

Compensation for any work item described in the contract documents but not listed in the bid schedule will be included in the payment for the item of work to which it is made subsidiary. Such items and bid items to which they are made subsidiary are identified in Items of Work and Construction Details section of this specification.

For items of work which lump sum prices are established in the contract, the quantity of work will not be measured for payment. Payment for each item will be made at the contract lump sum price and will constitute full compensation for completion of the work.

For items of work for which specific unit prices are established in the contract, the payment will be made based on the approved quantity measured by the engineer or weight tickets. Payment will constitute full compensation of the work completed as defined by each work item.

The volume of excavation as provided in the bid quantities has been determined from the topographic information shown on the Drawings using a computer program. Payment will be made based on the planned quantities provided unless additional excavation is directed by the Engineer. Excavation resulting from the contractor's improper construction operations, as determined by the Engineer, is not included for measurement and payment.

B. Items of Work and Construction Details

1. Bid Item No. 8 – Excavation (General)

This item will consist of excavation and grading of material needed for the following typical items as shown in the plans:

- Core trench
- Establishing pool final grade
- Outlet channel
- Auxiliary spillway
- Stilling basin

Excavations required for the placement of toe drain, tile exploration, new tile installation, riprap placement, are not included in this bid quantity and will not be measured for payment. The cost of excavation for these items are incidental and should be included as part of their corresponding bid items.

This item does not include the excavation for site stripping or topsoil, which is covered under Specification IA-CS-001. “Site Preparation”.

This item includes the hauling of excavated material to be used as earthfill or spoil.

The material excavated with suitable quality shall be used within the dike as directed by engineer.

Suitable excess excavated material shall be disposed of along top of banks for tile outlet channels or in designated areas by Engineer or Engineer's Representative.

See Specification IA-CS-023 for compaction method.

Payment will be based on plan quantity. If unsuitable material is found at the bottom of the core trench, the over excavation shall be measured and paid in a change order.

Payment will constitute full compensation for the following related Subsidiary items: Pollution Control; Removal of Water; and Structure Excavation.

2. Subsidiary Item – Borrow Excavation

This item will consist of excavation of the borrow area for placement of cohesive material in the embankment core and compacted clay liner, if included and as shown in the plans. The cost for excavation and transporting of borrow shall be included in corresponding bid Items listed in Specification IA-CS-023 “Earthfill”.

Borrow from any other area will not be allowed unless directed and approved by the Engineer.

The topsoil from the borrow area shall be removed to a minimum depth of 6" and stockpiled. When the borrow operations have been completed, grades shall be returned to that indicated on the plans and the topsoil shall be uniformly spread over the entire borrow area to a depth of 6".

No separate payment will be made for strip or respread of topsoil over borrow area.

3. Subsidiary Item – Structure Excavation

This item shall consist of the excavation necessary to install the steel sheet pile, riprap, corrugated metal pipe (CMP) conduit, CMP tile outlets and water control structure in the locations and as shown on the drawings.

No separate payment will be made for Structure Excavation. Compensation for this item will be included in payment with the corresponding bid items for CMP conduit; CMP water control structure; steel sheet pile; and riprap.

Construction Specification
000 IA-23 Earthfill

1. SCOPE

The work shall consist of the construction of earth fills required by the drawings and specifications. The completed work shall conform to the lines, grades, and elevations shown on the drawings or as staked in the field.

2. MATERIALS

All fill materials shall be obtained from required excavations and designated borrow areas. Fill materials shall contain no sod, brush, roots or other bio-degradable materials. Rocks larger than 6 inches in diameter shall be removed prior to compaction of the fill.

3. FOUNDATION PREPARATION

Foundations for earthfill shall be stripped a minimum of 6 inches to remove vegetation and other unsuitable materials. Foundation surfaces shall be scarified to a minimum depth of 2 inches prior to placing fill material.

Foundation and abutment surfaces shall not be sloped steeper than 1.5 horizontal to 1 vertical unless otherwise shown on the drawings.

4. PLACEMENT

Fill shall not be placed until the required excavation and foundation preparation have been completed and the foundation has been inspected and approved by NRCS. Fill shall not be placed upon a frozen surface, nor shall snow, ice, or frozen material be incorporated in the fill.

Adjacent to structures or pipes, fill shall be placed in a manner which will prevent damage. The height of the fill adjacent to structures or pipes shall be increased at approximately the same rate on all sides.

The materials used throughout the earth fill shall be essentially uniform. Selective placement shall be as shown on the drawings or approved by NRCS.

If the surface of any layer becomes too hard and smooth for proper bond with the succeeding layer, it shall be scarified to a minimum depth of 2 inches before the next layer is placed.

The top surfaces of embankments shall be maintained approximately level during construction, except that a cross-slope of approximately 2% shall be maintained to ensure effective drainage.

When moving fill material from the borrow area(s) to the embankment by use of bulldozers only, the following steps shall be followed:

- Immediately after the borrow material is pushed to the embankment, it shall be spread in horizontal lifts placed parallel to the centerline of the embankment.
- Compactive effort will then be applied by operating equipment parallel to the centerline of the fill or embankment.
- Lift thicknesses shall be in strict compliance with Clause 6, below.

Sectional fills are not allowed unless they are shown on the construction drawings.

5. CONTROL OF MOISTURE CONTENT

The moisture content of the fill material shall be adequate for obtaining the required compaction. Material that is too wet shall be dried to meet this requirement, and material that is too dry shall have water added and mixed until the requirement is met.

The moisture content of the fill material shall be such that a ball formed with the hands does not crack or separate when struck sharply with a pencil and will easily ribbon out between the thumb and finger.

Earth foundations under and adjacent to concrete structures shall be prevented from drying and cracking before concrete and backfill are placed.

The application of water to the fill materials shall be accomplished at the borrow areas insofar as possible.

6. COMPACTION

Earth fill shall be compacted by one of the following methods as specified on the plans or in Section 8, Special Specifications. If no method is specified, compaction will be in accordance with Method 1.

- Method 1 - Earthfill shall be placed so that the wheels or tracks of the loaded hauling equipment, traveling in a direction parallel to the centerline of fill, pass over the entire surface of each layer being placed. Low ground pressure vehicles shall not be used for this purpose.
- Method 2 - Two (2) complete passes of a tamping-type roller will be made over each layer. The roller shall be capable of exerting a minimum force of two hundred (200) pounds per square inch.
- Method 3 - Minimum density shall be 90% of the maximum density as determined by ASTM D 698 and as shown on the plans.

The maximum thickness of a lift of fill before compaction shall be 9 inches, unless otherwise indicated on the drawings.

Fill adjacent to structures, pipe conduits, and appurtenances shall be placed in layers not more than 4 inches thick and compacted to a density equivalent to that of the surrounding fill. Methods used to obtain compaction for fine or coarse grained materials are as follows:

- For fine grained materials, hand tamping or manually directed power tampers may be used. Hand compaction only shall be used to compact the earthfill under the bottom half of circular pipes. Manually directed power tampers shall not be used in tight spaces where applying full compactive effort will result in direct contact of the tamper plate with the pipe. Care should be taken so that compaction around the spillway pipe does not cause uplift of the pipe resulting in a void beneath the pipe.
- For coarse grained materials (sands and gravels), vibratory plate compactors shall be used for obtaining compaction. However, hand tamping shall be used to compact the material under the bottom half of circular pipes.

In all cases, follow manufacturer instructions for the specific compaction equipment being used. Heavy equipment shall not be operated within 2 feet of any structure or pipe.

Compacting of fill adjacent to concrete structures shall not be started until the concrete is 7 days old.

7. ISLANDS, MOUNDS, AND LOAFING AREAS ON WETLAND RESTORATION, ENHANCEMENT, OR CREATION PROJECTS

Islands shall be randomly located within the wetland area at locations shown on the drawings or as staked in the field. The orientation of island shorelines shall be random with attention given to prevailing

winds to limit wave damage. In general, the side of the island with the longest dimension shall be parallel to the prevailing wind direction. Side slopes of islands shall be as shown on the drawings, but in no case shall be steeper than 6 horizontal to 1 vertical. Island shapes shall be irregular.

Loafing areas shall be constructed in the areas shown on the drawings or as staked in the field and shall be graded to drain runoff water. The elevation of at least one loafing area should be above the maximum water level whenever possible.

Excavated material not suitable for embankments, wetland dikes, or islands can be used to create mounds or blended into surrounding topography to create a natural appearance. Spoil material shall not be spread on existing wetland areas.

Organic soils shall not be used to construct islands, loafing areas, dikes, or embankments.

8. SPECIFIC SITE REQUIREMENTS

A. Measurement and Payment

For items of work which specific unit prices are established in the contract, the volume of earthfill will be computed to the nearest cubic yard by the method of average cross-sectional end areas. No deduction in volume will be made for embedded items, such as, conduits inlet structures and their appurtenances. The pay limits for computation shall be as shown on the drawings with the further provisions that earthfill voids resulting from over excavation of the foundation, outside specified lines and grades, will be included in the measurement for payment only under the following conditions:

- Where such over excavation is directed by the engineer to remove unsuitable material, and
- Where the unsuitable condition is not a result of the contractor's improper construction operations as determined by the engineer.

Earthfill beyond the specified lines and grades to backfill excavation required for compliance with OSHA requirements will be considered subsidiary to the earthfill bid item(s).

Payment for each type and compaction class of earthfill and earth backfill is made at the contract unit price for that type and compaction class of earthfill. Such payment will constitute full compensation for all labor, material, equipment, and all other items necessary and incidental to the performance of the work.

Compensation for any item of work described in the contract, but not listed in the bid schedule is included in the payment for the item of work to which it is made subsidiary. Such items and the items to which they are made subsidiary are identified in this specific section.

B. Items of Work and Construction Details

Items of work to be performed in conformance with this specification and the construction details therefore are:

1. Bid Item No. 9 – Earthfill (General)

This item shall consist of the earthfill necessary to construct the submerged berms and additional fill to be placed over the tile to provide adequate cover. Cohesive material found during general grading and compacted liner removal can be used for these areas. Sand and gravel found on site shall not be used for this earthfill.

Compaction shall be Method 1. Rocks larger than 6" shall be removed prior to compaction.

Payment for these items shall be based on plan quantity unless additional length or location of tile varies from what is shown on the plans. The plan quantity is based on neat lines and does not account for any shrinkage.

Payment will constitute full compensation for the following related Subsidiary items: Pollution Control, Removal of Water, and Backfill Required Excavation.

2. Bid Item No. 10 – Earthfill (General Dam)

This item will consist of earthfill placement and compaction necessary to construct the portion of the embankment that is not considered part of the embankment core. The embankment shall be over-built above the design elevation by 5% of the fill height. Cohesive material found during general grading and compacted liner removal can be used for this area. Sand and gravel found on site shall not be used for fill for this item.

Compaction shall be Method 1. Rocks larger than 6" shall be removed prior to compaction.

Payment for this item shall be based on plan quantity. The plan quantity is based on neat lines and does not account for any shrinkage. The plan quantity does not include the required over-build of 5% of the fill height.

Payment will constitute full compensation for the following related Subsidiary items: Pollution Control, Removal of Water, and Backfill Required Excavation.

3. Bid Item No. 11 – Earthfill (Dam Core)

This item will consist of earthfill placement and compaction necessary to construct the portion of the embankment designated the embankment core, including the core trench. Cohesive material taken from the designated borrow area should be used for this area. Sand and gravel found on site shall not be used for fill for these items.

Compaction shall be Method 2. Rocks larger than 6" shall be removed prior to compaction.

Payment for this item shall be based on plan quantity. The plan quantity is based on neat lines and does not account for any shrinkage.

Payment will constitute full compensation for the following related Subsidiary items: Pollution Control, Removal of Water, and Backfill Required Excavation.

4. Subsidiary Item – Backfill Required Excavation

This item shall consist of backfilling the areas excavated to install the other components related to the project such as piping or structures and to locate and remove the tile lines.

Compaction adjacent to the structures shall be as indicated above. All other compaction shall be Method 1 or equivalent.

No separate payment will be made for Backfill of Structure Excavation. Compensation for this item will be included in payment for Corrugated Metal Pipe; CMP Drawdown Structure; Riser Inlet Structure, Tile Investigation and Removal and Dual Wall HDPE.

Construction Specification
000 IA-24 Drainfill

1. SCOPE

The work shall consist of furnishing and placing drainfill required in the construction of structure drainage systems and filter diaphragms around conduits.

2. MATERIALS

Drainfill shall be sand, gravel, or crushed stone. It shall be composed of clean, hard, durable mineral particles free from organic matter, clay balls, soft particles, or other substances that would interfere with their free-draining properties. Aggregates of crushed limestone may be used only for coarse drainfill but shall be thoroughly washed and screened so that not more than 3 percent by weight is finer than a No. 4 sieve.

Coarse drainfill shall be graded as follows:

U.S. Sieve Designation	Percent Passing Sieve
1 1/2	100
3/4	75-100
1/2	25-80
3/8	20-60
No. 4	0-10
No. 8	0-5
No. 100	0-3

Fine drainfill shall be graded as follows:

U.S. Sieve Designation	Percent Passing Sieve
3/8	100
No. 4	95-100
No. 8	75-95
No. 16	50-70
No. 30	25-50
No. 50	10-20
No. 100	0-6
No.200	0-3

3. BASE PREPARATION

Foundation surfaces and trenches shall be free of organic matter, loose soil, foreign substances, and standing water when the drainfill is placed.

4. PLACEMENT

Drainfill shall not be placed until the trench excavation has been inspected and approved by NRCS. Installation of the drainage conduit shall be inspected and approved by NRCS before covering it with

drainfill. No foreign materials shall be allowed to become intermixed with or otherwise contaminate the drainfill. Drainfill material shall be placed in a manner to avoid segregation of particles by size.

5. COMPACTION

1. Foundation Trench Drain
   a. No compaction will be required beyond that resulting from the placing and spreading operations.
2. Filter Diaphragm
   a. Each layer of sand material shall be flooded with clean water prior to compaction.
   b. Compaction shall be accomplished while the material is wet from step (1) above.
   c. Each layer shall be compacted by a minimum of 2 passes of a hand directed vibratory plate compactor over the entire layer surface.
   d. Layer thickness shall not exceed 12 inches after compaction.
3. Filter Diaphragm Outlet
   a. Sand material shall be placed so the layer thickness does not exceed 4 inches after compaction.
   b. Each layer shall be compacted by a minimum of 2 passes of a hand directed vibratory plate compactor over the entire layer surface.

6. SPECIFIC SITE REQUIREMENTS

A. Measurement and Payment

Compensation for any work item described in the contract documents but not listed in the bid schedule will be included in the payment for the item of work to which it is made subsidiary. Such items and bid items to which they are made subsidiary are identified in Items of Work and Construction Details section of this specification.

For items of work which lump sum prices are established in the contract, the quantity of work will not be measured for payment. Payment for each item will be made at the contract lump sum price and will constitute full compensation for completion of the work.

For items of work for which specific unit prices are established in the contract, the payment will be made based on the approved quantity measured by the engineer or weight tickets. Payment will constitute full compensation of the work completed as defined by each work item.

B. Items of Work and Construction Details

1. Bid Item No. 12 – Drainfill, Fine

This item is part of the construction of the toe drains, including backfill with material meeting the requirements of fine drainfill, as shown in the plans. However, payment for the excavation, furnishing and installation of the toe drain(s), is covered under the listed bid items in Specifications IA-CS-046.

Measurement and payment shall be on a plan quantity. Plan quantity listed in the proposal will be used to measure and pay for the bid.

Payment will constitute full compensation for the following related subsidiary items: Site Preparation and Pollution Control.

2. Subsidiary Item:

The filter diaphragm and diaphragm outlet shall consist of material meeting the Fine Drainfill requirements, except for the end of the diaphragm outlet, where Coarse Drainfill is shown on the plans.

The cost to excavate the portion needed for the filter diaphragm and placement of Fine and Coarse Drainfill material in the diaphragm and diaphragm outlet are considered incidental and shall be included with the cost of installing the wetland drawdown outlet pipe.

Construction Specification
000 IA-26 Topsoiling

1. SCOPE

The work shall consist of salvaging topsoil from borrow areas or required excavations and spreading it on the exposed disturbed areas.

2. QUALITY OF TOPSOIL

Topsoil shall consist of friable surface soil reasonably free of grass, roots, weeds, sticks, stones, or other foreign materials.

3. EXCAVATION

After the site has been cleared and grubbed, the topsoil shall be removed from borrow areas and required excavation areas to the depth as shown on the drawings. Topsoil shall be stockpiled at locations approved by NRCS.

4. SPREADING

Spreading shall not be done when the ground or topsoil is frozen, excessively wet, or otherwise in a condition detrimental to the work. Surfaces designated to be covered shall be lightly scarified just prior to the spreading operation. Where compacted fills are designated to be covered by topsoil, the topsoil shall be placed concurrently with the fill and shall be bonded to the compacted fill with the equipment.

Topsoil shall be placed to the minimum depth shown on the drawings. After the spreading operation is completed, the surface shall be finished to a reasonably smooth surface.

5. SPECIFIC SITE REQUIREMENTS

A. Measurement and Payment

Compensation for any work item described in the contract documents but not listed in the bid schedule will be included in the payment for the item of work to which it is made subsidiary. Such items and bid items to which they are made subsidiary are identified in Items of Work and Construction Details section of this specification.

For items of work which lump sum prices are established in the contract, the quantity of work will not be measured for payment. Payment for each item will be made at the contract lump sum price and will constitute full compensation for completion of the work.

For items of work for which specific unit prices are established in the contract, the payment will be made based on the approved quantity measured by the engineer or weight tickets. Payment will constitute full compensation of the work completed as defined by each work item.

B. Items of Work and Construction Details

1. Bid Item No. 13 – Topsoil Strip, Salvage, and Respread

This item will consist of stripping and stockpiling topsoil and spreading it as the surface layer of all excavations and earthfills.

Areas to receive a minimum six-inch layer of topsoil include areas of the embankment that do not have riprap, borrow area, additional fill placed over new tile, and any other areas noted in the plans.

Measurement and payment for topsoiling shall be on a plan quantity.

Grading areas with at least six inches of topsoil remaining will not require topsoil respreading unless required by engineer.

Payment will constitute full compensation for the following related subsidiary items: Site Preparation and Pollution Control.

Construction Specification
000 IA-31 Concrete

1. SCOPE

The work shall consist of furnishing, forming, placing, finishing, and curing Portland cement concrete including steel reinforcement.

2. MATERIALS

Portland Cement shall conform to ASTM C 150 and shall be Type I or Type II.

Fine Aggregates shall conform to ASTM C 33 and shall be composed of clean, uncoated grains of material.

Coarse Aggregates shall be gravel or crushed stone conforming to ASTM C 33 and shall be clean, hard, durable and free from clay or coating of any character. The maximum size of coarse aggregate shall be 1 1/2 inches or as shown on the drawings.

Water shall be clean and free from injurious amounts of oil, acid, salt, alkali, organic matter, or other deleterious substances.

Air entraining agent shall conform to ASTM C 260.

Fly ash may be used as a partial substitution for Portland cement and shall be in strict compliance with ASTM C 618, Class F or C. The loss by ignition shall not exceed 4.0 percent.

Blast-furnace slag may be used as a partial substitution for Portland cement and shall be in conformance with ASTM C 989 for ground granulated blast-furnace slag (GGBF slag).

Water-reducing admixtures shall conform to ASTM C 494 and may be the following types:

1. Type A - Water-reducing admixture
2. Type D - Water-reducing and retarding admixture
3. Type F - Water-reducing, high range admixture (superplasticizer).
4. Type G - water-reducing, high range, and retarding admixture (superplasticizer).

Type D or G admixture may be used when the air temperature is over 80 degrees F. at the time of mixing and/or placement.

Calcium Chloride or other antifreeze compounds or accelerators will not be allowed.

Preformed expansion joint filler shall be a commercially available product made of bituminous, sponge rubber or closed cell foam materials with a minimum thickness of 1/2 inch.

Reinforcing steel shall be free from loose rust, oil, grease, paint, or other deleterious matter. Reinforcing steel shall conform to one or more of the following:

1. Reinforcing Bars - ASTM A 615 or A 996, Grade 40 or greater, deformed.
2. Welded Wire Fabric - ASTM A 185 or A 497.

Waterstops shall be either metallic or nonmetallic. Metallic waterstops shall be fabricated from sheets of copper or galvanized steel. Nonmetallic waterstops shall be made of natural or synthetic rubber or vinyl chloride polymer or copolymer. Rubber, polymer and copolymer waterstops shall have ribbed or bulb-type

anchor flanges and a hollow tubular center bulb, unless otherwise shown on the drawings. All waterstops shall be of the sizes shown on the drawings.

Curing compound shall be a liquid membrane-forming compound suitable for spraying on the concrete surface. The curing compound shall meet the requirements of ASTM C 309 Type 2 (white pigmented).

3. CONCRETE DESIGN MIX

The contractor will be responsible for the determining the design mix proportions in accordance with the requirements included in this paragraph and shall provide a copy of the mix to the NRCS Engineer at Natural Resources Conservation Service least 3 days prior to placing any concrete. The concrete mix shall be of such proportions as to provide a minimum strength of 3500 p.s.i. in 28 days, unless otherwise shown on the drawings. The air content shall be 4 to 8 percent of the volume of the concrete at the time of placement. The slump shall be 2 to 5 inches except when superplasticizer is used. The slump shall be 3 inches or less prior to the addition of superplasticizer admixture and shall not exceed 7 1/2 inches following addition and mixing. The fine aggregate shall be 30-50 percent of the total combined aggregate based on oven dry weights. The contractor shall provide tests to verify that the design mix meets the requirements. In lieu of this, one of the following mix proportions per cubic yard may be used:

Mix Number	Minimum Cement, Pounds	Fly Ash, Pounds	GGBF Slag, Pounds	Maximum **Water, Gallons
1	564	0	0	33
2	470	45-90	0	31-34
3	517	129	0	31*
4	366	114	91	31*
5	259	103	155	31*

** Total of available aggregate moisture, mixing water added at the plant and mixing water added at the job site (one gallon equals 8.33 pounds).
* Requires water reducing admixture.

4. MIXTURES AND MIXING

Ready-mixed concrete shall be batched, mixed and transported in accordance with ASTM C 94. Concrete shall be uniform and thoroughly mixed when delivered to the forms. No mixing water in excess of the amount shown for the design mix or in an amount that would cause the maximum slump to be exceeded shall be added to the concrete during mixing, hauling or after arrival at the point of delivery. The concrete shall be batched and mixed so that the temperature of the concrete at the time of placing shall be between 50 and 90 degrees F.

5. BATCH TICKET

The contractor shall obtain from the supplier a delivery ticket for each batch of concrete before unloading at the site. The following information shall be included on the ticket: name of concrete supplier, job name or location, date, truck number, amount of concrete, time loaded or time of first mixing cement, aggregate, and mixing water added at the plant, type and amount of cement, type and amount of admixtures, oven dry weights of fine and coarse aggregate, and moisture content(%) or weight of water contained in the aggregates.

The following information shall be added to the batch ticket on site: mixing water added on site, time concrete arrived on site and time concrete was unloaded.

Upon completion of the concrete placement, copies of all batch tickets shall be provided to NRCS.

6. REINFORCING STEEL

Before reinforcement is placed, the surfaces of the bars or mesh shall be cleaned to remove any loose, flaky rust, mill scale, oil, grease, or other foreign substances. After placement, the reinforcement shall be maintained in a clean condition until it is completely embedded in the concrete.

Reinforcing bars shall be cut and bent according to ACI Standard 315.

Tack welding of bars shall not be permitted. Reinforcement shall be accurately placed as shown on the drawings and secured in position in a manner that will prevent its displacement during placement of concrete. Metal chairs, metal hangers, metal spacers or concrete chairs shall be used to support reinforcement. Precast concrete chairs shall be manufactured from concrete equal in quality to the concrete being placed. Precast concrete chairs shall be moist at the time concrete is placed

Splices of reinforcing bars shall be made only at the locations shown on the drawings, unless otherwise approved by the NRCS Engineer. All reinforcing splices and placement shall be in accordance with ACI 318 and as shown on the drawings.

After placement of the reinforcement, concrete shall not be placed until the reinforcement has been inspected and approved by NRCS.

7. PREPARATION OF FORMS AND SUBGRADE

Prior to placement of concrete, the forms and subgrade shall be free of woodchips, sawdust, debris, water, ice, snow, extraneous oil, mortar, or other harmful substances or coatings. Any oil on the reinforcing steel or other surfaces required to be bonded to the concrete shall be removed. All surfaces shall be firm and damp prior to placing concrete. Placement of concrete on mud, dried earth, uncompacted fill, or frozen subgrade will not be permitted.

The forms and associated false-work shall be substantial and unyielding and shall be constructed so that the finished concrete will conform to the specified dimensions and elevations. Forms will be mortar tight. Forms with torn surfaces, worn edges, dents or other defects will not be used. Forms shall be coated with a nonstaining form release agent before being set into place. Excess form coating material shall not stand in puddles in the forms or come in contact with the steel reinforcement or hardened concrete against which fresh concrete is to be placed.

Form accessories to be partially or wholly embedded in the concrete, such as ties and hangers, shall be of a commercially manufactured type. Non fabricated wire shall not be used. Form ties shall be constructed so that the ends or end fasteners can be removed without causing spalling at the surface of the concrete.

Metal form ties used within the forms on structures with a total volume of concrete exceeding fifteen cubic yards shall be equipped with cones or other devices that permit their removal to a depth of at least one inch without damage to the concrete. The holes resulting from cones and other devices shall be patched in accordance with Section 9.

Form ties except those specifically covered by the preceding paragraph shall be broken off flush with the formed surface. Any surface areas which have been spalled or otherwise damaged shall be repaired in accordance with Section 9.

Steel tying and form construction adjacent to new concrete shall not be started until concrete has cured at least 12 hours.

Concrete joints shall be of the type and at the locations shown on the drawings. Splices in metal waterstops shall be brazed, welded or overlapped and bolted.

Splices in nonmetallic waterstops shall be cemented or joined as recommended by the manufacturer.

8. PLACING CONCRETE

Concrete shall not be placed until the subgrade, forms, and steel reinforcement have been inspected and approved by the NRCS Inspector. Any deficiencies are to be corrected before the concrete is delivered for placement.

Concrete shall be delivered to the site and discharged into the forms within 1 1/2 hours after the introduction of the cement to the aggregates. When a superplasticizer is used, the concrete shall be discharged within the manufacturer's recommended time limit for discharge after addition of the admixture. In hot weather or under conditions contributing to quick setup of the concrete, discharge of the concrete shall be accomplished in 45 minutes unless a set-retarding admixture is used, in which case the manufacturer's recommended time limit will apply.

Addition of water at the job site may be done at the beginning of placement of each load of concrete in order to obtain allowable slump, provided that the maximum water content and water/cement ratio in the design mix is not exceeded. Addition of water will not be permitted after placement of the load has started.

The concrete shall be deposited as closely as possible to its final position in the forms and shall be worked into corners and around reinforcement and other embedded items in a manner which prevents segregation. Formed concrete shall be deposited in layers 24 inches or less in depth and shall be continuously deposited so that no concrete will be deposited on concrete which has hardened sufficiently to cause the formation of "cold joints". Concrete containing superplasticizer shall be placed in lifts not exceeding 5 feet in depth. If the surface layer of concrete sets during placement to the degree that it will not flow and merge with the succeeding layer when tamped or vibrated, the contractor shall discontinue placing concrete and install a construction joint. Construction joints shall be completed as shown on the drawings or by one of the following methods:

1. The joint shall be constructed using a 6 inch wide by 1/4 inch steel plate. The surfaces of the construction joint shall be prepared by washing and scrubbing with a wire brush or wire broom to expose coarse aggregate. The steel plate shall be embedded 3" in the concrete.
2. The joint surface shall be cleaned to expose coarse aggregate by sandblasting or air-water cutting after the concrete has gained sufficient strength to prevent displacement of the coarse aggregate or cement fines. The surface of the concrete shall not be cut so deep as to undercut the coarse aggregate. The joint shall be washed to remove all loose material after cutting.

The surfaces of all construction joints shall be kept continuously moist for at least 1 hour prior to placement of the new concrete. The new concrete shall be placed directly on the cleaned and washed surface. New concrete shall not be placed until the hardened concrete has cured at least 12 hours.

Concrete shall not be dropped more than 5 feet vertically unless suitable equipment is used to prevent segregation. Concrete containing superplasticizer shall not be dropped more than 12 feet vertically.

Immediately after the concrete is placed in the forms, it shall be consolidated by vibration, spading or hand tamping as necessary to insure smooth surfaces and dense concrete. Care should be taken not to over-vibrate concrete containing superplasticizer. Vibration shall not be supplied directly to the reinforcing steel, the forms or concrete which has hardened to the degree that it does not insure a monolithic bond with the preceding layer, The use of vibrators to transport concrete in the forms or conveying equipment will not be permitted.

9. FORM REMOVAL AND FINISHING

Forms shall be left in place for at least 24 hours after placing concrete. Forms shall be removed in such a way as to prevent damage to the concrete. Supports shall be removed in a manner that will permit concrete to take the stresses due to its own weight uniformly and gradually.

Immediately after removal of the forms, concrete which is honey combed, damaged or otherwise defective shall be repaired or replaced. All cavities or depressions resulting from form tie removal shall be patched with a non-shrink grout, mortar mix or epoxy-type sealer. Non-shrink grout consists of 1 part cement and 2-1/2 parts sand that will pass a No. 16 sieve. Only enough water shall be added to produce a filling which is at the point of becoming rubbery when the material is solidly packed.

All repaired and patched areas shall be cured as required in Section 10.

10. CURING

Concrete shall be cured for a period of not less than 7 consecutive days by one of the following approved methods:

1. Membrane Curing: Concrete shall be cured with white pigmented curing compound. The compound shall be sprayed on moist concrete as soon as free water has disappeared, but shall not be applied to any surface until patching, repairs and finishing of that surface are completed. Curing compound shall not be applied to surfaces requiring bond to subsequently placed concrete, such as construction joints, shear plates, reinforcing steel, and other embedded items. Surfaces subjected to heavy rainfall or running water within 3 hours after curing compound has been applied or surfaces damaged by subsequent construction operations during the curing period, shall be reapplied in the same manner as the original application.
2. Moist Curing: Concrete shall be cured by maintaining all surfaces continuously wet for the entire curing period.
3. Cover: Adequately cover an exposed structure with burlap mats, or other material and continually soak with water.

11. BACKFILLING

Backfilling may begin when the curing period has ended. Backfill against the structure will be placed in no more than 4-inch layers and compacted by hand tamping or with manually directed power tampers or plate vibrators. Layers compacted in this manner shall extend not less than 2 feet from any part of the concrete structure.

12. HOT AND COLD WEATHER CONCRETING

When the atmospheric temperature may be expected to drop below 40° F. at the time concrete is delivered to the work site, during placement, or at any time during curing period, concrete shall be mixed, placed and protected in accordance with ACI Standard 306, “Recommended Practice for Cold Weather Concreting.”

When climatic or other conditions are such that the temperature of the concrete may reasonably be expected to exceed 90o F. at the time of delivery to the work site, during placement or during the first 24 hours after placement, concrete shall be mixed, placed and protected in accordance with ACI Standard 305, “Recommended Practice for Hot Weather Concreting.”

13. SPECIFIC SITE REQUIREMENTS

A. Measurement and Payment

Compensation for any work item described in the contract documents but not listed in the bid schedule will be included in the payment for the item of work to which it is made subsidiary. Such items and bid items to which they are made subsidiary are identified in Items of Work and Construction Details section of this specification.

For items of work which lump sum prices are established in the contract, the quantity of work will not be measured for payment. Payment for each item will be made at the contract lump sum price and will constitute full compensation for completion of the work.

For items of work for which specific unit prices are established in the contract, the payment will be made based on the approved quantity measured by the engineer or weight tickets. Payment will constitute full compensation of the work completed as defined by each work item.

B. Items of Work and Construction Details

1. Subsidiary Item - Concrete

This item shall consist of all necessary concrete, reinforcing steel, formwork, materials, and labor to place poured concrete and reinforced concrete as shown in the drawings including, but not limited to, the Water Control Structure and concrete collars around pipe connections.

No separate payment will be made for Concrete. Compensation for this item will be included in the payment for the Water Control Structure and Tile Installation.

However, concrete structures that meet the Iowa Statewide Urban Design and Specifications (SUDAS), will be paid as discussed below.

2. Bid Item No. 14 – 12” Dia. Reinforced Concrete Pipe

This item shall consist of constructing and installing the necessary 12” diameter reinforced concrete pipe as shown on the drawings. The installed pipe, along with all materials, installation, bedding, measurement and payment, shall meet the requirements laid out in SUDAS Division 4, Section 4020.

Measurement and payment for 12” diameter reinforced concrete pipe shall be on an installed linear foot basis and shall include all necessary fittings and adapters. Payment will also include all subsidiary items required for the installation such as trench excavations, backfill, site preparation, removal of water, and concrete collars at joints.

3. Bid Item No. 15 – 12” Dia. Reinforced Concrete Pipe (Gasketed)

This item shall consist of constructing and installing the necessary 12” diameter reinforced concrete pipe as shown on the drawings. The installed pipe, along with all materials, installation, bedding, measurement and payment, shall meet the requirements laid out in SUDAS Division 4, Section 4020.

Measurement and payment for 12” diameter reinforced concrete pipe shall be on an installed linear foot basis and shall include all necessary fittings and adapters. Payment will also include all subsidiary items required for the installation such as trench excavations, backfill, site preparation, removal of water, and concrete collars at joints.

4. Bid Item No. 16 – 30” Dia. Reinforced Concrete Pipe

This item shall consist of constructing and installing the necessary 12” diameter reinforced concrete pipe as shown on the drawings. The installed pipe, along with all materials, installation, bedding, measurement and payment, shall meet the requirements laid out in SUDAS Division 4, Section 4020.

Measurement and payment for 12” diameter reinforced concrete pipe shall be on an installed linear foot basis and shall include all necessary fittings and adapters. Payment will also include all subsidiary items required for the installation such as trench excavations, backfill, site preparation, removal of water, and concrete collars at joints.

“Concrete Structures (Water Level Control)”:

5. Bid Item No. 17 – Modified SW-402 Water Control Structure

The work shall consist of constructing and installing the modified SW-402 rectangular storm sewer manhole structure that meets the requirements of SUDAS Division 6, Section 6010 and as noted in the drawings. Shop drawings shall be provided to and approved by the engineer prior to ordering structures.

Measurement and payment shall be on a per-unit basis and shall include access hatch, steel channels, stoplogs, excavation, earthfill, sub-base preparation, bedding material, removal of water, concrete collar at joint, erosion controls, all hardware, necessary fittings, adapters, and appurtenances to construct the special structure shown in the drawings.

6. Bid Item No. 18 – 12” Dia. Reinforced Concrete Apron, Footing, Bar Guard

The work shall consist of constructing the necessary 12” diameter reinforced concrete apron, apron section footing, and apron guard that meet SUDAS Division 4, Section 4030 as noted in the drawings.

In general, the concrete apron shall meet the requirements of SUDAS 4030, unless otherwise stated in the drawings. The excavation for and subsequent installation of the apron shall be as shown in the drawings.

Measurement and payment shall be on a per-unit basis and shall include: all necessary fittings and adapters; excavation; earthfill; sub-base preparation; removal of water; concrete collar at joint; erosion controls; footing; bar guard; and all necessary work and appurtenances to construct the apron shown in the drawings.

7. Bid Item No. 19 – 30” Dia. Reinforced Concrete Apron, Footing, Bar Guard

The work shall consist of constructing the necessary 30” diameter reinforced concrete apron, apron section footing, and apron guard that meet SUDAS Division 4, Section 4030 as noted in the drawings.

In general, the concrete apron shall meet the requirements of SUDAS 4030, unless otherwise stated in the drawings. The excavation for and subsequent installation of the apron shall be as shown in the drawings.

Measurement and payment shall be on a per-unit basis and shall include: all necessary fittings and adapters; excavation; earthfill; sub-base preparation; removal of water; concrete collar at joint; erosion controls; footing; bar guard; and all necessary work and appurtenances to construct the apron shown in the drawings.

NATURAL RESOURCES CONSERVATION SERVICE
CONSTRUCTION SPECIFICATION

IA-46 TILE DRAINS FOR LAND DRAINAGE

1. SCOPE

The work shall consist of furnishing and installing drainage tubing and tile and the necessary fittings and appurtenances.

2. MATERIALS

Concrete drain tile shall conform to the requirements of ASTM C 412 and clay drain tile shall conform to the requirements of ASTM C 4.

Corrugated polyethylene (PE) pipe (tubing) and fittings shall conform to ASTM F 405 (3" to 6") or F 667 (3" to 24"), as appropriate. Corrugated profile wall (dual wall) polyethylene (PE) pipe shall meet or exceed the requirements of ASTM F 2648 (2" to 60") or ASTM F 2306 (12" to 60"). Pipe conforming to AASHTO M 252 (3" to 10") or AASHTO M 294 (12" to 60") is acceptable. Perforated tubing shall have a water inlet area of at least 1 square inch per foot, provided by perforations spaced uniformly along the long axis of the tubing. The perforations shall be circular or slots. Circular perforations shall not exceed 3/16 inch in diameter. Slots shall not be more than 1/8 inch wide.

3. EXCAVATION

Unless otherwise specified, excavation for and subsequent installation of each drain line shall begin at the outlet end and progress upstream.

The trench or excavation for the tile shall be constructed to the line, depths, cross sections, and grade shown on the drawings or as directed by the NRCS Inspector. The trench bottom shall be smooth and free of exposed rock. If rock is encountered in the trench bottom, over-excavate the trench and place at least 6 inches of compacted earth or sand bedding in the trench to bring it up to the conduit grade.

If not otherwise shown on the drawings, trench width at the top of the conduit shall be the minimum required to permit installation and provide bedding conditions suitable to support the load on the conduit, but with not less than three (3) inches of clearance on each side of the conduit. Maximum trench width shall be the conduit diameter plus 12 inches measured at the top of the conduit, unless approved bedding is installed.

Trench shields, shoring and bracing, or other methods, necessary to safeguard the workers and work, and to prevent damage to the existing improvements shall be furnished, placed, and subsequently removed by the contractor.

Plow installation is allowed. Minimum trench width shall be two (2) inches wider than the conduit on each side. Grade control and bedding conditions shall be closely inspected during plow installation. Boulders, cobbles, or cemented soil scan cause the plow to jump or lose grade. These hardpoints can also puncture or dimple and deform the pipe.

4. PREPARING THE BEDDING

Unless otherwise specified, no filter or envelope is required. In stable soils the bottom of the trench shall be shaped to form a semicircular, trapezoidal, or 90 degree "V" groove in its center. The groove shall be shaped to fit the size of tile. The 90-degree "V" groove shall not be used on conduits greater than 6 inches in diameter.

If the bottom of the trench does not provide a sufficiently stable or firm foundation for the drain tile, a sand-gravel mix or other approved materials shall be used to stabilize the bottom of the trench.

5. FILTER OR ENVELOPE MATERIAL

When a filter is specified, the shape of the bottom of the trench, gradation and the thickness of the filter or envelope material to be placed around the tile will be as shown on the drawings. The envelope or filter material shall be placed in the bottom of the trench just prior to the laying of the tile. The tile shall then be laid and the envelope or filter material placed over the tile.

6. PLACEMENT AND JOINT CONNECTIONS

All drains shall be laid to grade.

Joints between lateral drain tile shall vary with soil type as follows:

a. Peat and muck - 1/4 inch preferred, 3/8 inch maximum
b. Clay - 1/8 inch preferred, 1/4 inch maximum
c. Silt and loam - 1/16 inch preferred, 1/8 inch maximum
d. Sand - tightest possible fit.

Joint between main drain tile which serve only to collect and transport drainage water from lateral tile lines should be the tightest fit possible.

Where the joint width exceeds the maximum above, the joint shall be covered with a permanent type material such as coal tar pitch treated roofing paper, fiber glass sheet or mat, or plastic sheet.

After placement and blinding of plastic tubing, but prior to backfilling, sufficient time shall elapse to allow the tubing to reach the ambient temperature of the trench. All split fittings shall be securely tied with nylon cord before backfill is placed. When corrugated plastic tubing is used, no more than 5% stretch will be allowed.

7. CONNECTIONS

Lateral connections will be made with manufactured appurtenances (wyes, tees, etc.) comparable in strength and durability with the specified tile or tubing unless otherwise shown on the drawings.

Existing tile lines not shown on the drawings but encountered during installation shall be bridged across the trench or connected into the new line, as directed by NRCS.

Connections with the outlet pipe shall be made watertight.

8. OUTLETS

A continuous section of non-perforated conduit at least 20 feet long shall be used at the outlet. At least two-thirds of the outlet pipe shall be buried in the ditch bank, and the cantilever section must extend to the toe of the ditch side slope or the side slope protected from erosion. Acceptable materials for use at the outlet include the following:

a. Corrugated metal pipe, galvanized or aluminum, 16 gauge minimum;
b. Smooth steel pipe with a minimum wall thickness of 3/16 inch;
c. Smooth plastic pipe, polyvinyl chloride (PVC), with a SDR of 26 or less or schedule 40 or heavier; or
d. Corrugated profile wall (dual wall) polyethylene pipe (PE).

All plastic (PVC) and polyethylene pipe (PE) outlets shall include ultra-violet stabilizer. PVC or PE pipe outlets shall not be used where burning vegetation on the outlet ditch bank is likely to create a fire hazard.

The outlet shall be equipped with a flap-gate type rodent guard.

9. BLINDING

After the tubing or tile is placed in the excavated groove, friable material from the sides of the trench shall be placed around the tubing, completely filling the trench to a depth of not less than three inches over the top of the tubing. For material to be suitable it must not contain hard clods, rocks, frozen soil, or fine material which will cause a silting hazard to the drain. Tubing placed during any one day shall be blinded by the end of the day's work.

10. BACKFILLING

The backfilling of the trench shall be completed as rapidly as consistent with the soil conditions. Automatic backfilling machines may be used. Backfill shall extend above the ground surface and be well rounded over the trench.

Unless otherwise shown on the plans, in mineral soils, the minimum cover over subsurface drains shall be 2.4 feet. In organic soils, the minimum depth of cover after initial subsidence shall be 3.0 feet.

11. SPECIAL SPECIFICATIONS

A. Measurement and Payment

Compensation for any work item described in the contract documents but not listed in the bid schedule will be included in the payment for the item of work to which it is made subsidiary. Such items and bid items to which they are made subsidiary are identified in Items of Work and Construction Details section of this specification.

For items of work which lump sum prices are established in the contract, the quantity of work will not be measured for payment. Payment for each item will be made at the contract lump sum price and will constitute full compensation for completion of the work.

For items of work for which specific unit prices are established in the contract, the payment will be made based on the approved quantity measured by the engineer or weight tickets. Payment will constitute full compensation of the work completed as defined by each work item.

B. Items of Work and Construction Details

1. Bid Item No. 20 – 6" Dia. Corrugated HDPE Pipe (Single-Wall; Perforated)

This item will consist of furnishing and installing corrugated, single-wall, perforated HDPE pipe to be used as drain tile and toe drains as shown on the drawings.

Measurement and payment for the corrugated HDPE pipe shall be on an installed linear foot basis and shall include all necessary fittings and adapters.

Payment will also include all subsidiary items required for installation such as trench excavations, backfill, site preparation, and removal of water, and concrete collars at joints. Additional fill required to provide adequate cover as needed is included in Bid Item 9: Earthfill, General.

2. Bid Item No. 21 – 6” Dia. Corrugated HDPE Pipe (Single-Wall; Non-Perforated)

This item will consist of furnishing and installing corrugated, single-wall, non-perforated HDPE pipe to be used as drain tile as shown on the drawings.

Measurement and payment for the corrugated HDPE pipe shall be on an installed linear foot basis and shall include all necessary fittings and adapters.

Payment will also include all subsidiary items required for installation such as trench excavations, backfill, site preparation, and removal of water, and concrete collars at joints. Additional fill required to provide adequate cover as needed is included in Bid Item 9: Earthfill, General.

3. Bid Item No. 22 – Stoplog Storage Structure

This item will consist of furnishing and installing a vertical section of non-perforated dual wall corrugated polyethylene pipe as shown on the drawings. This bid item shall include the gravel base, metal lid, and lock. Excavation and backfill needed for installation is incidental to this bid item.

Measurement and payment will be based on lump sum provided in the contract documents.

3. Bid Item No. 23 – Outlet Riser Structure

This item will consist of providing and installing the outlet riser structure as shown on the drawings, including the bar guard, concrete collar at joint, and concrete base.

Provide detailed shop drawings of the outlet riser structure and appurtenances.

Measurement and payment for the outlet riser structure shall be on a per-unit basis.

Subsidiary items include the concrete base, excavation, backfill, and control of water.

Construction Specification
000 IA-51 Corrugated Metal Pipe Conduits

1. SCOPE

The work shall consist of furnishing and placing circular, arched or elliptical corrugated metal pipe and the necessary fittings.

2. MATERIALS

Metallic-coated steel corrugated pipe and fittings shall be zinc-coated or aluminized, Type 2, and shall conform to the requirements of ASTM A 760 and A 929 for the specified type and size of pipe. Aluminum corrugated pipe shall conform to the requirements of ASTM B 745 for the specified type and size of pipe. All pipe is subject to the following additional requirements:

1. When polymer coating is specified, pipe, coupling bands and anti-seep collars shall be coated in accordance with ASTM A 762. All riveted joints shall be caulked as described in paragraph B.
2. Pipe with annular corrugations shall be furnished with caulked seams. Riveted pipe joints shall be caulked with a bituminous mastic material during fabrication to provide a watertight joint. All circumferential and longitudinal seams shall be caulked before riveting. This shall be accomplished by applying a uniform bead of the mastic compound to the inner lap surface before riveting such that when the rivets are in place, all voids are filled and a coating of mastic is between the lap surfaces. The inner surface of coupling bands shall be asphalt coated in the field prior to installation. A neoprene gasket having a minimum thickness of 3/8 inch and a minimum width of 7 inches may be used in lieu of mastic coated coupling bands.
3. Welded or lock seams in helical corrugated pipe are considered to be watertight.
4. When close riveted pipe is specified: (1) the pipe shall be fabricated so that the rivet spacing in the circumferential seams shall not exceed 3 inches, except that 12 rivets will be sufficient to secure the circumferential seams in 12-inch pipe, and (2) in those portions of the longitudinal seams that will be covered by the coupling bands, the rivets shall have finished flat heads or the rivets and holes shall be omitted and the seams shall be connected by welding to provide a minimum of obstruction to the seating off the coupling bands.
5. Double riveting or double spot welding of pipe less than 42 inches in diameter may be required. If specified, the riveting or welding shall be done in the manner specified for pipe 42 inches or greater in diameter.

3. COUPLING BANDS

Coupling bands shall meet the requirements of the table below or have detailed drawings submitted for approval by the State Conservation Engineer. Coupling bands shall be of the same minimum thickness (gage) as the pipe being connected.

4. FABRICATION

Fabrication of all appurtenances shall be done as shown on the drawings. All appurtenances shall be made of metallic-coated steel when corrugated steel pipe is used and aluminum when used with aluminum pipe. Dissimilar metals shall not be installed in contact with each other.

Description of Coupling Band	Maximum Fill Height, Ft.	Maximum Pipe Diam., In.
24-inch wide coupling band with four 1/2-inch Diam. galvanized rods with tank lugs for annular or helical corrugated metal pipe. Bands shall have a minimum lap of 3 inches.	All	All
Hugger band from Armco Steel Corp. for helical corrugated metal pipe with reformed ends; and for annular corrugated pipe. Bands include O-ring gaskets and two 1/2-inch Diam.	35	48
Hugger band without rods and lugs but	20	24
Angles riveted or welded to a coupling band and drawn tight with bolts. Bands shall be a minimum of 7 corrugations wide and have a minimum lap of 2 inches.	35	15
Flanged couplings for helical corrugated 25 12 pipe welded to the ends of the pipe and field assembled by a minimum of 3/8-inch Diam. bolts. A joint sealer shall be placed between the flanges to ensure water tightness	25	12
1/ Use is limited to sites where soft foundation and conduit elongation is not anticipated.		

5. REPAIR OF DAMAGED COATINGS

The Contractor shall place the pipe without damaging the pipe or coatings. The pipe shall be transported and handled in a manner to prevent damage to the pipe or coating. Breaks, scuffs, or other damage to the various coatings shall be repaired as follows:

1. Metallic Coating - by thoroughly wire brushing the damaged area and cleaning with solvent, and then painting two coats of one of the following paints:
   a. Zinc Dust - Zinc Oxide Primer conforming to ASTM D 79 and D 520.
   b. Single package, moisture cured urethane prime in silver metallic color.
   c. Zinc-rich cold galvanized compound, brush, or aerosol applications.
2. Polymer Coating - apply two coats of polymer material similar to and compatible with the durability, adhesion and appearance of the original polymer coating. The repair coating shall be a minimum thickness of 0.010 (10 mils) after drying and shall bond securely to the pipe.

6. LAYING AND BEDDING THE PIPE

The pipe shall be laid to the line and grade shown on the drawings and shall be firmly and uniformly bedded throughout its entire length. Details of the bedding are as shown on the drawings.

The pipe shall be laid with the outside laps of circumferential joints pointing upstream and with longitudinal laps on the sides at approximately the vertical mid-height of the pipe. Field welding of corrugated galvanized steel pipe will not be permitted. The pipe sections shall be joined with coupling bands.

7. BACKFILLING

Special care shall be taken during backfill operations not to disturb the grade and alignment.

The pipe shall be tied down or loaded sufficiently during backfilling around the sides to prevent its being lifted from the bedding.

Backfill material shall have sufficient moisture so that optimum compaction can be obtained. Backfill around the pipe shall be placed in layers not more than 4 inches thick before compaction.

Each layer of backfill shall be compacted with power tampers, hand tampers, or plate vibrators to the same density requirements as specified for the adjacent embankment. Backfill over and around the pipe shall be brought up uniformly on all sides. The passage of earth moving equipment will not be allowed over the pipe until backfill has been placed above the top of the pipe surface to a depth of two (2) feet.

8. SPECIFIC SITE REQUIREMENTS

A. Measurement and Payment

Compensation for any work item described in the contract documents but not listed in the bid schedule will be included in the payment for the item of work to which it is made subsidiary. Such items and bid items to which they are made subsidiary are identified in Items of Work and Construction Details section of this specification.

For items of work which lump sum prices are established in the contract, the quantity of work will not be measured for payment. Payment for each item will be made at the contract lump sum price and will constitute full compensation for completion of the work.

For items of work for which specific unit prices are established in the contract, the payment will be made based on the approved quantity measured by the engineer or weight tickets. Payment will constitute full compensation of the work completed as defined by each work item.

B. Items of Work and Construction Details

1. Bid Item No. 24 – Anti-Seep Collars

This item will consist of furnishing and installing the anti-seep collars and necessary appurtenances as shown in the drawings.

2. Subsidiary Item – CMP Animal Guard

This item will consist of furnishing and installing the CMP animal guard, for each size tile such as AgriDrain RG series or IDALS approved equal.

No separate payment will be made for the CMP animal guard. Compensation for this item shall be included in the payment for CRCS and CMP tile outlet pipes.

3. Subsidiary Item – Corrugated Metal Water-tight Coupling Bands

This item will consist of furnishing and installing the corrugated metal coupling bands for connections of all pipe sections and structure stubouts.

No separate payment will be made for the CMP coupling bands. Compensation for this item shall be included in the payment for CRCS metal outlet pipe.

Construction Specification
000 IA-61 Loose Rock Riprap

1. SCOPE

The work shall consist of the construction of loose rock riprap revetments, structures and blankets, including filter layers or bedding where specified.

2. MATERIALS

Rock for loose rock riprap, filter layers or bedding shall come from sources approved by NRCS. The rock shall be excavated, selected and handled as necessary to meet the quality and grading requirements of this specification and the construction drawings.

Individual rock fragments shall be dense, sound and free from cracks, seams and other defects conducive to accelerated weathering. The rock fragments shall be angular to sub rounded in shape. The least dimension of an individual rock fragment shall not be less than 1/3 the greatest dimension of the fragment unless otherwise specified on the construction drawings.

3. SUBGRADE PREPARATION

The subgrade surfaces on which the riprap or bedding is to be placed shall be cut or filled and graded to the lines and grades shown on the drawings. When fill to subgrade lines is required, it shall consist of approved materials and shall be compacted to a density equal to the adjacent existing soil material.

Rock materials shall not be placed until the foundation preparation is completed and the subgrade surfaces have been inspected and approved by NRCS.

4. EQUIPMENT-PLACED ROCK RIPRAP

Rock shall be placed by equipment on the surfaces and to the depths specified. The riprap shall be constructed to the full thickness in one operation and in such a manner as to avoid serious displacement of the underlying materials. The rock shall be delivered and placed in a manner that will ensure that the riprap in place shall be reasonably homogeneous with the larger rocks uniformly distributed and firmly in contact, one to another, with the smaller rocks and spalls filling the voids between the larger rocks. Placement of rock shall begin at the bottom of the slope or downstream end of the structure.

Riprap shall be placed in a manner to prevent damage to structures. Hand placing will be required to the extent necessary to prevent damage to adjacent structures.

5. HAND-PLACED RIPRAP

Rock shall be placed by hand on the surfaces and to the depths specified. It shall be securely bedded with the larger rocks firmly in contact, one to another. Spaces between the larger rocks shall be filled with smaller rocks and spalls. Smaller rocks shall not be grouped as a substitute for larger rock. Flat slab rock shall be laid on edge unless otherwise specified. Placement of rock shall begin at the bottom of the slope or downstream end of the structure.

6. FILTER LAYERS OR BEDDING

When the drawings specify filter layers or bedding beneath riprap, the filter or bedding material shall be spread uniformly on the prepared subgrade surfaces to the depth specified. Compaction of filter layers or

bedding will not be required, but the surface of such layers shall be finished reasonably free of mounds, dips or windrows.

7. SPECIFIC SITE REQUIREMENTS

A. Measurement and Payment

Compensation for any work item described in the contract documents but not listed in the bid schedule will be included in the payment for the item of work to which it is made subsidiary. Such items and bid items to which they are made subsidiary are identified in Items of Work and Construction Details section of this specification.

For items of work which lump sum prices are established in the contract, the quantity of work will not be measured for payment. Payment for each item will be made at the contract lump sum price and will constitute full compensation for completion of the work.

For items of work for which specific unit prices are established in the contract, the payment will be made based on the approved quantity measured by the engineer or weight tickets. Payment will constitute full compensation of the work completed as defined by each work item.

B. Items of Work and Construction Details

1. Bid Item No. 25 – Rip Rap (Class E)

This item shall consist of furnishing and placing the rock riprap in the locations as shown on the drawings. Rock shall be Class E Revetment Stone as defined by Iowa Department of Transportation (DOT).

All rip rap shall comply with Iowa DOT Section 4130.

Payment will be based on actual tonnage delivered to the site based on weight tickets to the nearest 0.1 ton, subject to the approval of the engineer.

Payment will constitute full compensation for the following related subsidiary items: Pollution Control, Removal of Water, Structure Excavation and Geotextile Fabric.

2. Subsidiary Item – Geotextile Fabric

Geotextile Fabric, IA-95

Construction Specification
000 IA-62 Grout for Rip Rap

1. SCOPE

The work shall consist of furnishing, transporting, and placing grout in the construction of grouted rock rip rap sections as shown on the drawings.

2. MATERIALS

Cement shall be Type I or Type II Portland cement conforming to ASTM C 150. Fly ash shall be in strict compliance with ASTM C 618, Class F or C. It may be used as a partial substitution for Portland cement for amounts not to exceed 20 percent of the total amount of cementitious material in the grout. The loss by ignition shall not exceed 4.0 percent. Fine aggregate shall conform to ASTM C 33 and shall be composed of clean, uncoated grains of material. Water shall be clean and free of harmful chemicals. Air entraining admixtures shall conform to ASTM C 260.

3. GROUT MIX

The grout mix shall be as follows:

1.	Cement:	10 sacks or 940 pounds per cubic yard
2.	Fine concrete aggregate:	2,100 pounds per cubic yard
3.	Water:	45 gallons per cubic yard or enough to provide a thick creamy consistency
4.	Air content:	6 to 10 percent.

When ready-mixed grout is furnished, the contractor shall furnish to NRCS a delivery ticket showing the time of loading and the quantities of materials used for each load of grout mix.

No mixing water in excess of the amount called for in the grout mix shall be added during mixing, hauling or after arrival of the mix at the delivery point.

4. CONVEYING AND PLACING

Grout mix shall be delivered to the site and placed within 1 1/2 hours after the introduction of the cement to the aggregates. In hot weather or under conditions contributing to quick setup of the grout mix, discharge of the grout shall be accomplished in 45 minutes unless a set-retarding admixture is used, in which case the manufacturer's recommended time limit will apply.

Grout mix shall not be dropped more than 5 feet vertically unless suitable equipment is used to prevent segregation.

The grout mix shall not be placed until the rock rip rap has been inspected and approved.

Rock to be grouted shall be kept wet for at least 2 hours immediately prior to grouting. Grout shall not be placed in standing or flowing water.

The grout shall be consolidated by spading or mechanical vibration. The grout shall not be forced to flow laterally to its final location.

The average rate of grout application shall be 5.4 cubic feet per square yard of rip rap (0.6 cubic feet per square foot).

5. CURING GROUT

Grout shall be cured for 7 days by either:

1. Applying white pigmented curing compound at a rate of 1 gallon per 150 square feet or as recommended by the manufacturer.
2. Water soak exposed surface for the entire 7 days.
3. Cover with burlap, mats or other material and maintain in a moist condition.
4. Cover with four (4) mil plastic sheeting while grout is still wet.

Grout mix shall not be placed when daily minimum temperatures are expected to be lower than 40 degrees F unless facilities are provided to maintain the temperature of the materials at 50 to 90 degrees F during the placement and curing period. Grout may not be placed on frozen surfaces. When freezing conditions are expected, rock shall be heated to 50 to 90 degrees F for at least 24 hours prior to placing grout.

6. SPECIFIC SITE REQUIREMENTS

A. Measurement and Payment

Compensation for any work item described in the contract documents but not listed in the bid schedule will be included in the payment for the item of work to which it is made subsidiary. Such items and bid items to which they are made subsidiary are identified in Items of Work and Construction Details section of this specification.

For items of work which lump sum prices are established in the contract, the quantity of work will not be measured for payment. Payment for each item will be made at the contract lump sum price and will constitute full compensation for completion of the work.

For items of work for which specific unit prices are established in the contract, the payment will be made based on the approved quantity measured by the engineer or weight tickets. Payment will constitute full compensation of the work completed as defined by each work item.

B. Items of Work and Construction Details

1. Bid Item No. 26 – Grout for Rip Rap

This item shall consist of furnishing and placing grout on those portions of the rip rap shown on the drawings.

The grout shall be consolidated into the voids with the use of a concrete vibrator. The average rate of grout application shall be adjusted to ensure that the voids are properly filled through the entire rip rap depth. A smooth surface is not to be created by the grouting operation.

Grout shall be placed in contact with the downstream sheet pile over the full depth of rip rap. There shall be no voids against the sheet pile. Grout against sheet pile upstream shall be smooth.

Grouting operation shall not be performed except in the presence of the Engineer or Engineer's Representative.

Grout unused or wasted, including any partial batch remaining at the completion of the operation, will be estimated and deducted by the Engineer from the volume for payment.

Payment will constitute full compensation for the following related subsidiary items: Pollution Control; and Removal of Water.

Construction Specification
000 IA-81 Metal Fabrication and Installation

1. SCOPE

The work shall consist of furnishing, fabricating, and installing metalwork including metal parts of composite structures.

2. MATERIALS

Steel shall be of structural quality. Finished surfaces shall be smooth and true to assure proper fit. Bolts, nuts, washers, rods, rivets, etc., shall be of a material equal to the steel being fastened.

3. PROTECTIVE COATINGS

Protective coatings will consist of either galvanizing or painting and shall be applied by the fabricator.

Galvanizing shall consist of a zinc coating by the hot dip process, except that bolts, nuts, and washers may have a electrodeposited zinc coating.

Paint System for this specification shall consist of the application of one coat of Epoxy Polyamide Primer (lead and chromate free) and one or more coats of Epoxy Polyamide (intermediate or finish), lead free. When finished, it will have a minimum dry film thickness of 8.0 mils.

4. FABRICATION

Materials shall be carefully fabricated as shown on the drawings. The fabrication shall be smooth and true to assure proper fit. Galvanized items shall not be cut, welded, or drilled after the zinc coating is applied.

5. ERECTION

The metal shall be erected true and plumb, closely conforming to the drawings.

6. SPECIFIC SITE REQUIREMENTS

A. Measurement and Payment

Compensation for any work item described in the contract documents but not listed in the bid schedule will be included in the payment for the item of work to which it is made subsidiary. Such items and bid items to which they are made subsidiary are identified in Items of Work and Construction Details section of this specification.

For items of work which lump sum prices are established in the contract, the quantity of work will not be measured for payment. Payment for each item will be made at the contract lump sum price and will constitute full compensation for completion of the work.

For items of work for which specific unit prices are established in the contract, the payment will be made based on the approved quantity measured by the engineer or weight tickets. Payment will constitute full compensation of the work completed as defined by each work item.

B. Items of Work and Construction Details

1. Subsidiary Item - Steel

This item will consist of furnishings and installing the steel channel pieces used to form the crest of the sheet pile weir (waler), reinforcing, and steel used for fabrication of the stoplog channel, and steel grating used in covering the water control structure.

Sections of the waler shall be welded such that the entire waler functions as a continuous piece of metal.

Bolts, nuts and washers required for installation shall be included and considered incidental.

No separate payment will be made for steel. Payment for this item will be considered subsidiary to Steel Sheet Pile and the Water Control Structure.

Construction Specification
000 IA-95 Geotextile

1. SCOPE

This work shall consist of furnishing all materials, equipment, and labor necessary for the installation of geotextile.

2. MATERIAL QUALITY

Geotextile shall be manufactured from synthetic long chain or continuous polymeric filaments or yarns, having a composition of at least 95 percent, by weight, of polypropylene, polyester or polyvinylidene chloride. The geotextile shall be formed into a stable network of filaments or yarns that retain their relative position to each other, are inert to commonly encountered chemicals and are resistant to ultraviolet light, heat, hydrocarbons, mildew, rodents and insects. Unless otherwise specified, the class and type of geotextile shall be as shown on the drawings and shall meet the requirements for materials that follow:

1. Woven Geotextile shall conform to the physical properties listed in Table 1. The woven geotextile shall be manufactured from monofilament yarns that are woven into a uniform pattern with distinct and measurable openings. The geotextile shall be manufactured so that the yarns will retain their relative position with regard to each other. The yarns shall contain stabilizers and/or inhibitors to enhance their resistance to ultraviolet light or heat exposure. The edges of the material shall be salvaged or otherwise finished to prevent the outer yarn from unraveling.
2. Nonwoven Geotextile shall conform to the physical properties listed in Table 2. Nonwoven geotextile shall be manufactured from randomly oriented fibers that have been mechanically bonded together by the needle-punched process. In addition, one side may be slightly heat bonded. Thermally bonded, nonwoven geotextile, in addition to mechanically bonded, nonwoven geotextile, may be used for Road Stabilization. The filaments shall contain stabilizers and/or inhibitors to enhance their resistance to ultraviolet light or heat exposure.
3. The geotextile shall be shipped in rolls wrapped with a protective covering to keep out mud, dirt, dust, debris and direct sunlight. Each roll of geotextile shall be clearly marked to identify the brand, type and production run.

3. STORAGE

Prior to use, the geotextile shall be stored in a clean dry place, out of direct sunlight, not subject to extremes of either hot or cold, and with the manufacturer's protective cover in place. Receiving, storage, and handling at the job site shall be in accordance with the requirements in ASTM D 4873.

4. SURFACE PREPARATION

The surface on which the geotextile is to be placed shall be graded to the neat lines and grades as shown on the drawings. The surface shall be reasonably smooth and free of loose rock and clods, holes, depressions, projections, muddy conditions and standing or flowing water (unless otherwise shown on the drawings).

5. PLACEMENT

Prior to placement of the geotextile, the soil surface will be inspected for quality assurance of design and construction. The geotextile shall be placed on the approved prepared surface at the locations and in accordance with the details shown on the drawings. The geotextile shall be unrolled along the placement area and loosely laid (not stretched) in such a manner that it will conform to the surface irregularities

when material is placed on or against it. The geotextile may be folded and overlapped to permit proper placement in the designated area.

The geotextile shall be joined by overlapping a minimum of 18 inches (unless otherwise specified), and secured against the underlying foundation material. Securing pins, approved and provided by the geotextile manufacturer, shall be placed along the edge of the panel or roll material to adequately hold it in place during installation. Pins shall be steel or fiberglass formed as a “U”, “L”, or “T” shape or contain “ears” to prevent total penetration. Steel washers shall be provided on all but the “U” shaped pins. The upstream or up-slope geotextile shall overlap the abutting down-slope geotextile. At vertical laps, securing Natural Resources Conservation Service pins shall be inserted through both layers along a line through approximately the midpoint of the overlap. At horizontal laps and across slope laps, securing pins shall be inserted through the bottom layer only. Securing pins shall be placed along a line approximately 2 inches in from edge of the of the placed geotextile at intervals not to exceed 12 feet unless otherwise specified. Additional pins shall be installed as necessary and where appropriate, to prevent any undue slippage or movement of the geotextile. The use of securing pins will be held to the minimum necessary. Pins are to be left in place unless otherwise specified.

Should the geotextile be torn or punctured, or the overlaps disturbed, as evidenced by visible geotextile damage, subgrade pumping, intrusion, or grade distortion, the backfill around the damaged or displaced area shall be removed and restored to the original approved condition. The repair shall consist of a patch of the same type of geotextile being used, overlaying the existing geotextile. The patch shall extend a minimum of 2 feet from the edge of any damaged area.

The geotextile shall not be placed until it can be anchored and protected with the specified covering within 48 hours or protected from exposure to ultraviolet light. Geotextile shall be placed in accordance with the following applicable specification according to the use indicated in drawings:

Slope protection – Class I or II as indicated in Tables 1 and 2.

The geotextile shall not be placed until it can be anchored and protected with the specified covering within 48 hours or protected from exposure to ultraviolet light. Rock shall not be pushed or rolled over the geotextile.

Class I, unprotected – limit height for dropping stone onto bare geotextile to 3 feet.

Class II, protected – require the use of 6 inches a clean pit-run gravel over the geotextile to cushion the stone and limit the height of drop to 3 feet.

On slopes with strong seepage flow, the geotextile must be in intimate contact with the soil to prevent erosion of the soil surface. Use 6 inches of a clean pit-run gravel over the geotextile to hold it in place and minimize voids under the riprap. Embedment of the geotextile in a trench to form a cutoff at regular intervals down the slope will prevent erosion under the fabric. Place cutoffs more closely together in highly erodible soils and wider apart in more stable soils

Subsurface drains – Class III as indicated in Tables 1 and 2.

The geotextile shall not be placed until drainfill or other material can be used to provide cover within the same working day. Drainfill material shall be placed in a manner that prevents damage to the geotextile. In no case shall material be dropped on uncovered geotextile from a height of more than 5 feet.

Road stabilization – Class IV as indicated in Tables 1 and 2.

The geotextile shall be unrolled in a direction parallel to the roadway centerline in a loose manner permitting conformation to the surface irregularities when the roadway fill material is placed on its surface. In no case shall material be dropped on uncovered geotextile from a height of more than 5 feet. Unless otherwise specified, the minimum overlap of geotextile panels joined without sewing shall be 24 inches.

The geotextile may be temporarily secured with pins recommended or provided by the manufacturer, but they shall be removed before the permanent covering material is placed.

Table 1. Requirements for Woven Geotextiles[1/]

Property	Test Method	Class I	Class II	Class III	Class IV
Grab tensile strength (pounds)	ASTM D4632	247 minimum	180 minimum	180 minimum	315 minimum
Elongation at failure (%)	ASTM D4632	< 50	< 50	< 50	< 50
Trapezoidal tear strength (pounds)	ASTM D4533	90 minimum	67 minimum	67 minimum	112 minimum
Puncture strength (pounds)	ASTM D6241	495 minimum	371 minimum	371 minimum	618 minimum
Ultraviolet light (% retained strength)	ASTM D4355	50 minimum	50 minimum	50 minimum	70 minimum
Permittivity (sec^{-1})	ASTM D4491	as specified			
Apparent opening size (AOS)[2/]	ASTM D4751	as specified			
Percent open area (POA)(%)	USACE [3/]CWO-02215-86	as specified			

[1/] All values are minimum average roll values (MARV) in the weakest principal direction, unless otherwise noted.

[2/] Maximum average roll value.

[3/] Note: CWO is a USACE reference.

Table 2. Requirements for Nonwoven Geotextiles[1/]

Property	Test Method	Class I[2/]	Class II[2/]	Class III[2/]	Class IV[2/]
Grab tensile strength (pounds)	ASTM D4632 grab test	202 minimum	157 minimum	112 minimum	202 minimum
Elongation at failure (%)	ASTM D4632	50 minimum	50 minimum	50 minimum	50 minimum
Trapezoidal tear strength (pounds)	ASTM D4533	79 minimum	56 minimum	40 minimum	79 minimum
Puncture strength (pounds)	ASTM D6241	433 minimum	309 minimum	223 minimum	433 minimum
Ultraviolet light (% retained strength)	ASTM D4355	50 minimum	50 minimum	50 minimum	50 minimum
Permittivity (sec^{-1})	ASTM D4491	0.7 minimum or as specified			
Apparent opening size (AOS)[3/]	ASTM D4751	0.22 minimum or as specified			

[1/] All values are minimum average roll values (MARV) in the weakest principal direction, unless otherwise noted.

[2/] Needle punched geotextiles may be used for all classes. Heat-bonded or resin-bonded geotextiles may be used for class IV only.

[3/] Maximum average roll value.

6. SPECIFIC SITE REQUIREMENTS

A. Measurement and Payment

Compensation for any work item described in the contract documents but not listed in the bid schedule will be included in the payment for the item of work to which it is made subsidiary. Such items and bid items to which they are made subsidiary are identified in Items of Work and Construction Details section of this specification.

For items of work which lump sum prices are established in the contract, the quantity of work will not be measured for payment. Payment for each item will be made at the contract lump sum price and will constitute full compensation for completion of the work.

For items of work for which specific unit prices are established in the contract, the payment will be made based on the approved quantity measured by the engineer or weight tickets. Payment will constitute full compensation of the work completed as defined by each work item.

B. Items of Work and Construction Details

1. Subsidiary Item - Geotextile

This item shall consist of furnishing and placing geotextile on all surfaces that contact the rock riprap as shown on the drawings and at concrete aprons.

Geotextiles shall conform to the requirements of IDOT Engineering Fabric for embankment erosion control.

The geotextile shall be placed with the long dimension parallel to the channel.

No separate payment will be made for geotextile. Compensation of this item will be included in the payment for the related bid item, Riprap.

PLANS

CONSTRUCTION PLANS FOR

IDALS NO. CLA953734C

NUTRIENT REDUCTION WETLAND

CLAY COUNTY, IOWA

JUNE 2026

GOVERNING SPECIFICATIONS

THE SPECIFICATIONS AS PREPARED BY IOWA DEPARTMENT OF AGRICULTURE AND LAND STEWARDSHIP AND BOLTON & MENK, INC. SHALL BE CONSIDERED AS PART OF THIS DOCUMENT. NATURAL RESOURCES CONSERVATION SERVICE CONSTRUCTION SPECIFICATIONS SHALL APPLY.

THE CURRENT EDITION OF THE "IOWA STATEWIDE URBAN STANDARD SPECIFICATIONS FOR PUBLIC IMPROVEMENTS" SHALL GOVERN.

IOWA DEPARTMENT OF TRANSPORTATION "STANDARD SPECIFICATIONS FOR HIGHWAY AND BRIDGE CONSTRUCTION" AND ALL CURRENT GENERAL SUPPLEMENTAL SPECIFICATIONS AND MATERIALS INSTRUCTIONAL MEMORANDUM SHALL GOVERN AS REFERENCED.

ALL APPLICABLE FEDERAL, STATE, AND LOCAL LAWS AND ORDINANCES WILL BE COMPLIED WITH IN THE CONSTRUCTION OF THIS PROJECT.

IOWA ONE CALL
1-800-292-8989
www.iowaonecall.com
811

THE SUBSURFACE UTILITY INFORMATION IN THIS PLAN IS UTILITY QUALITY LEVEL D. THIS UTILITY QUALITY LEVEL WAS DETERMINED ACCORDING TO THE GUIDELINES OF CI/ASCE 38-02, ENTITLED "STANDARD GUIDELINES FOR THE COLLECTION AND DEPICTION OF EXISTING SUBSURFACE UTILITY DATA."
THE CONTRACTOR IS RESPONSIBLE FOR CONTACTING IOWA ONE CALL BY PHONE AT 811, OR ON THE WEB AT HTTP://WWW.IOWAONECALL.COM/. TICKET# _____. TICKET NUMBER MUST BE PROVIDED TO THE NRCS PRIOR TO COMMENCEMENT OF WORK.

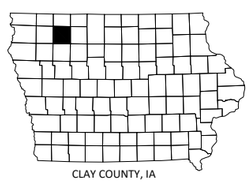

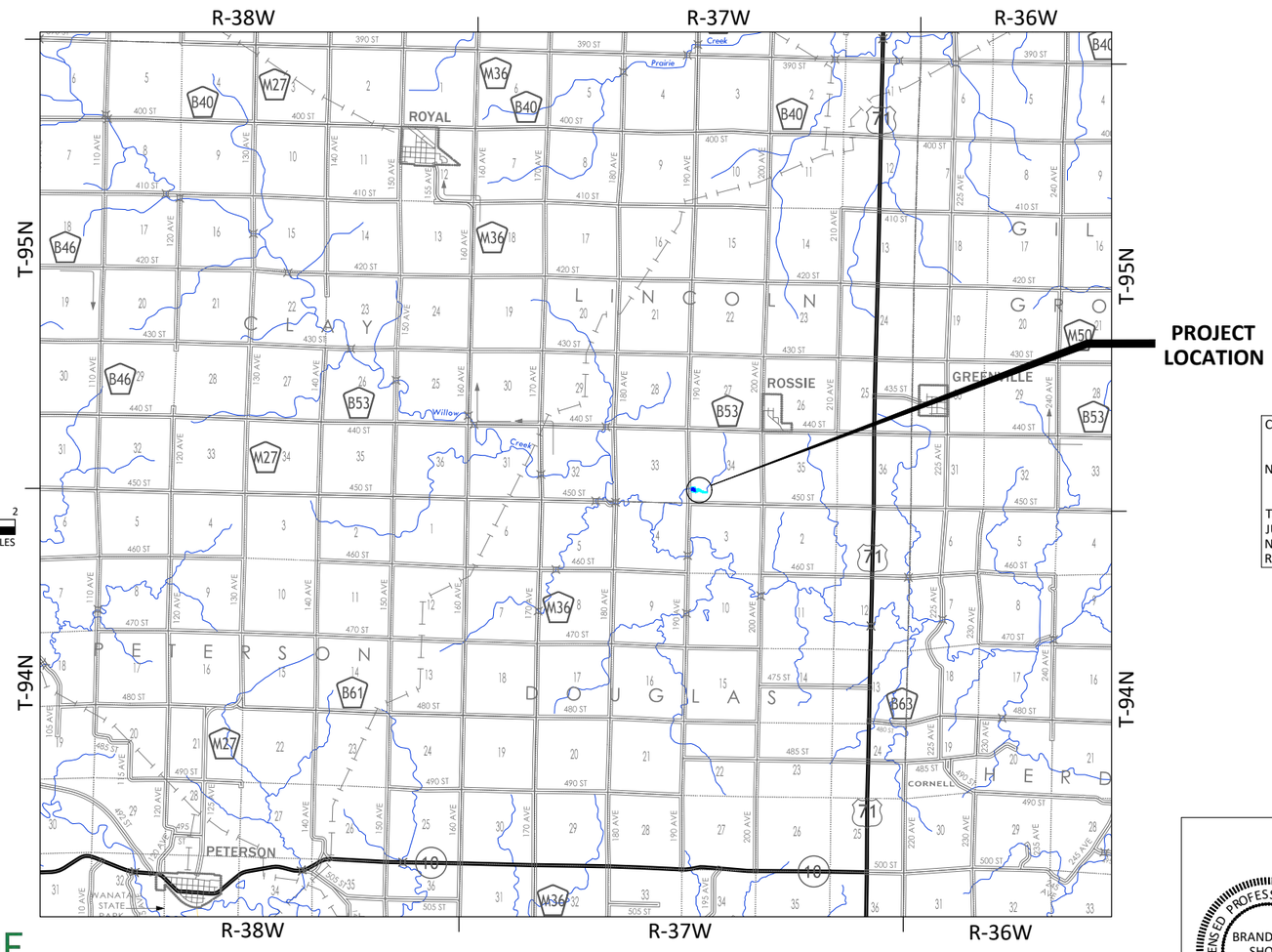

NOTES
1. IF A CULTURAL RESOURCE IS IDENTIFIED DURING CONSTRUCTION, STOP WORK IMMEDIATELY AND NOTIFY THE LOCAL NATURAL RESOURCES CONSERVATION SERVICE OFFICE.
2. THERE IS NO GUARANTEE THAT THE WETLAND WILL FILL OR REMAIN FILLED WITH WATER.

SHEET INDEX

SHEET NO.	SHEET TITLE
A.01	TITLE SHEET
A.02	PLAN OVERVIEW
A.03	EXISTING CONDITIONS AND REMOVALS
B.01	WATER CONTROL STRUCTURE DETAILS
B.02	SHEET PILE DETAILS
B.03	CPDT INSTALLATION DETAILS
B.04	RCP INSTALLATION DETAILS
B.05	MISCELLANEOUS DETAILS
C.01	ESTIMATED QUANTITIES
D.01	GRADING OVERVIEW
D.02	PLAN & PROFILE - EMBANKMENT
D.03	PLAN & PROFILE - STILLING BASIN & OUTLET CHANNEL
D.04	PLAN & PROFILE - AUXILIARY SPILLWAY
D.05	PLAN & PROFILE - DIVERSION BERMS
K.01	SEEDING OVERVIEW
M.01	PLAN & PROFILE - TILE MAIN RE-LAY
M.02	PLAN & PROFILE - DRAWDOWN PIPE & NEW TILE INSTALLATION

CONSERVATION PRACTICE STANDARDS USED:
656 - CONSTRUCTED WETLAND

NRCS JOB CLASS: IV
300 AC<WATERSHED AREA<1000 AC

TO THE BEST OF MY PROFESSIONAL KNOWLEDGE, JUDGEMENT, AND BELIEF, THESE PLANS MEET APPLICABLE NRCS STANDARDS AND APPLICABLE LAWS AND REGULATIONS.

IOWA DEPARTMENT OF AGRICULTURE & LAND STEWARDSHIP

PROJECT DATUM: STATE PLANE
HORIZONTAL: IOWA NORTH
VERTICAL: NAVD 1988

LICENSED PROFESSIONAL ENGINEER
BRANDON C. SHORT
29449
IOWA

I HEREBY CERTIFY THAT THIS ENGINEERING DOCUMENT WAS PREPARED BY ME OR UNDER MY DIRECT PERSONAL SUPERVISION AND THAT I AM A DULY LICENSED PROFESSIONAL ENGINEER UNDER THE LAWS OF THE STATE OF IOWA.

BRANDON C. SHORT, PE

LICENSE NUMBER: 29449 DATE: 06/10/2026

MY LICENSE RENEWAL DATE IS 12/31/2026

PAGES OR SHEETS COVERED BY THIS SEAL:
ALL SHEETS

BOLTON & MENK
1519 BALTIMORE DRIVE
AMES, IA 50010
Phone: (515) 233-6100
Email: Ames@bolton-menk.com
www.bolton-menk.com

DESIGNED	BCS
DRAWN	NVD
CHECKED	JPR
CLIENT PROJ. NO.	25X.140338.000

REV	DESCRIPTION	DATE
1.1	FINAL DESIGN REV. 1	02-25-2026

IOWA DEPARTMENT OF AGRICULTURE AND LAND STEWARDSHIP
IDALS PROJ. NO. CLA953734C
TITLE SHEET

SHEET A.01

©Bolton & Menk, Inc. 2026, All Rights Reserved
h:\IDALS\25x140338000\CAD\CID\140338A01.dwg 6/1/2026 9:07:13 AM

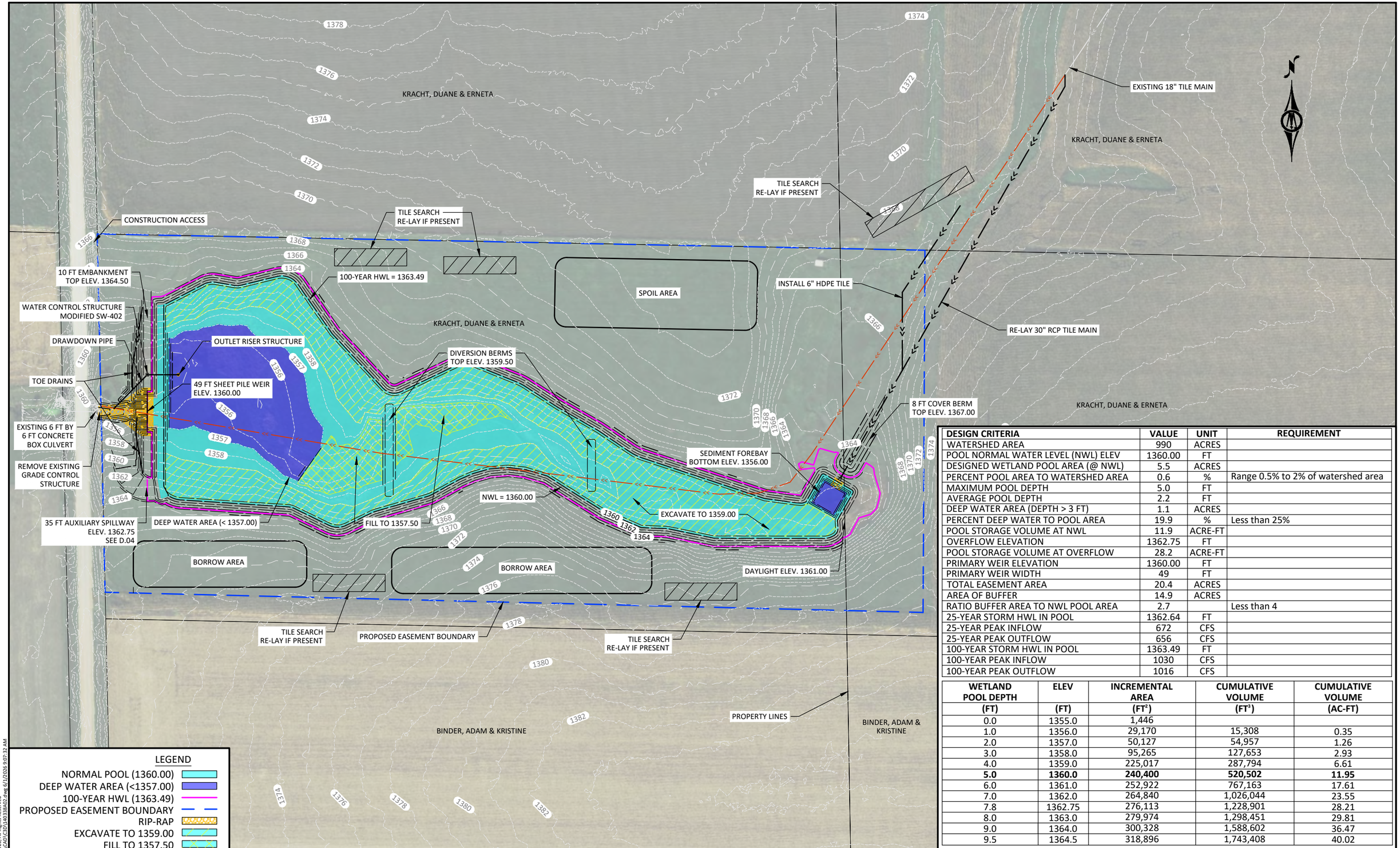

DESIGN CRITERIA	VALUE	UNIT	REQUIREMENT
WATERSHED AREA	990	ACRES	
POOL NORMAL WATER LEVEL (NWL) ELEV	1360.00	FT	
DESIGNED WETLAND POOL AREA (@ NWL)	5.5	ACRES	
PERCENT POOL AREA TO WATERSHED AREA	0.6	%	Range 0.5% to 2% of watershed area
MAXIMUM POOL DEPTH	5.0	FT	
AVERAGE POOL DEPTH	2.2	FT	
DEEP WATER AREA (DEPTH > 3 FT)	1.1	ACRES	
PERCENT DEEP WATER TO POOL AREA	19.9	%	Less than 25%
POOL STORAGE VOLUME AT NWL	11.9	ACRE-FT	
OVERFLOW ELEVATION	1362.75	FT	
POOL STORAGE VOLUME AT OVERFLOW	28.2	ACRE-FT	
PRIMARY WEIR ELEVATION	1360.00	FT	
PRIMARY WEIR WIDTH	49	FT	
TOTAL EASEMENT AREA	20.4	ACRES	
AREA OF BUFFER	14.9	ACRES	
RATIO BUFFER AREA TO NWL POOL AREA	2.7		Less than 4
25-YEAR STORM HWL IN POOL	1362.64	FT	
25-YEAR PEAK INFLOW	672	CFS	
25-YEAR PEAK OUTFLOW	656	CFS	
100-YEAR STORM HWL IN POOL	1363.49	FT	
100-YEAR PEAK INFLOW	1030	CFS	
100-YEAR PEAK OUTFLOW	1016	CFS	

WETLAND POOL DEPTH (FT)	ELEV (FT)	INCREMENTAL AREA (FT^2)	CUMULATIVE VOLUME (FT^3)	CUMULATIVE VOLUME (AC-FT)
0.0	1355.0	1,446		
1.0	1356.0	29,170	15,308	0.35
2.0	1357.0	50,127	54,957	1.26
3.0	1358.0	95,265	127,653	2.93
4.0	1359.0	225,017	287,794	6.61
5.0	**1360.0**	**240,400**	**520,502**	**11.95**
6.0	1361.0	252,922	767,163	17.61
7.0	1362.0	264,840	1,026,044	23.55
7.8	1362.75	276,113	1,228,901	28.21
8.0	1363.0	279,974	1,298,451	29.81
9.0	1364.0	300,328	1,588,602	36.47
9.5	1364.5	318,896	1,743,408	40.02

©Bolton & Menk, Inc. 2026, All Rights Reserved
h:\IDALS\25x140338000\CAD\C3D\140338402.dwg 6/1/2026 9:07:32 AM

BOLTON & MENK
1519 BALTIMORE DRIVE
AMES, IA 50010
Phone: (515) 233-6100
Email: Ames@bolton-menk.com
www.bolton-menk.com

DESIGNED BCS
DRAWN NVD
CHECKED JPR
CLIENT PROJ. NO. 25X.140338.000

REV	DESCRIPTION	DATE
1.1	FINAL DESIGN REV. 1	02-25-2026

IOWA DEPARTMENT OF AGRICULTURE AND LAND STEWARDSHIP
IDALS PROJ. NO. CLA953734C
PLAN OVERVIEW

SHEET A.02

PRESERVE EXISTING 18" CMP CULVERT

ABANDON EXISTING TILE IN PLACE
FILL WITH GROUT

REMOVE TREES WITHIN EASEMENT

REMOVE EXISTING GRADE
CONTROL STRUCTURE & RUBBLE

PRESERVE EXISTING 6 FT x 6 FT
CONCRETE BOX CULVERT

PRESERVE EXISTING 18" CMP CULVERT

REMOVE EXISTING TILE
OR CRUSH IN PLACE

REMOVE EXISTING LIVESTOCK SHELTER

REMOVE EXISTING TILE
OR CRUSH IN PLACE

REMOVE EXISTING TILE
OR CRUSH IN PLACE

N

BENCHMARK LOCATIONS

80000

500

505

80004

506

510

BENCHMARKS				
POINT NO.	NORTHING	EASTING	ELEVATION	DESCRIPTION
500	3833276.160	4463594.028	1390.68	5/8" REBAR LAND MARKER - BLUE METAL CAP
505	3833231.762	4466247.842	1377.61	1/2" REBAR LAND MARKER - YELLOW PLASTIC CAP
506	3830551.418	4466291.786	1394.73	5/8" REBAR LAND MARKER
510	3830488.550	4468930.299	1394.89	5/8" REBAR LAND MARKER
80000	3835924.809	4463550.929	1402.49	1" METAL ROD
80004	3830611.406	4463652.592	1375.31	1" TEAL PIPE - YELLOW PLASTIC CAP

NOTE: TILE REMOVALS SHALL INCLUDE A MINIMUM OF 20 FT OF TILE REMOVED EVERY 100 FT.

LEGEND

PROPOSED EASEMENT BOUNDARY
EXISTING TILE
TILE REMOVAL

HORZ. SCALE 0 60 120 FEET

©Bolton & Menk, Inc. 2026, All Rights Reserved
h:\IDALS\25x140338000\CAD\C3D\140338403.dwg 6/1/2026 9:07:49 AM

BOLTON & MENK
1519 BALTIMORE DRIVE
AMES, IA 50010
Phone: (515) 233-6100
Email: Ames@bolton-menk.com
www.bolton-menk.com

DESIGNED BCS
DRAWN NVD
CHECKED JPR
CLIENT PROJ. NO. 25X.140338.000

REV	DESCRIPTION	DATE
1.1	FINAL DESIGN REV. 1	02-25-2026

IOWA DEPARTMENT OF AGRICULTURE AND LAND STEWARDSHIP

IDALS PROJ. NO. CLA953734C

EXISTING CONDITIONS AND REMOVALS

SHEET A.03

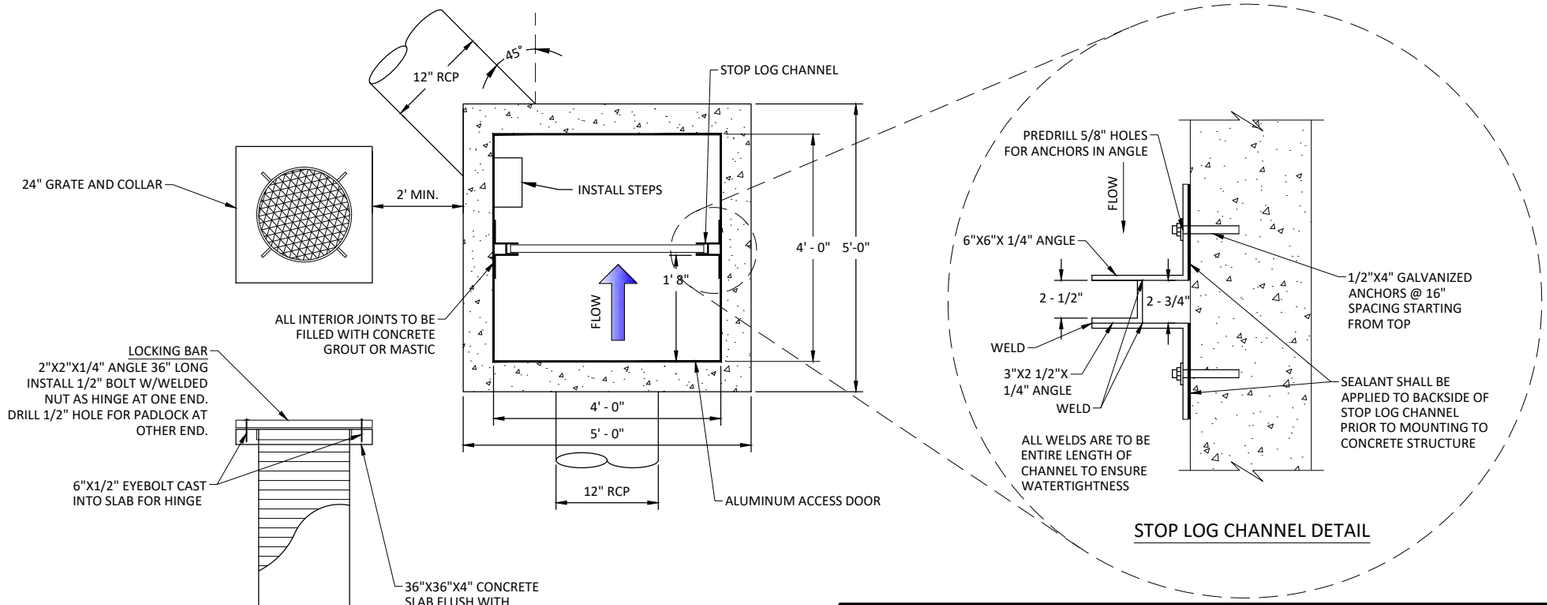

STOP LOG CHANNEL DETAIL

COVER AND STOP LOG STORAGE DETAIL

NOT TO SCALE

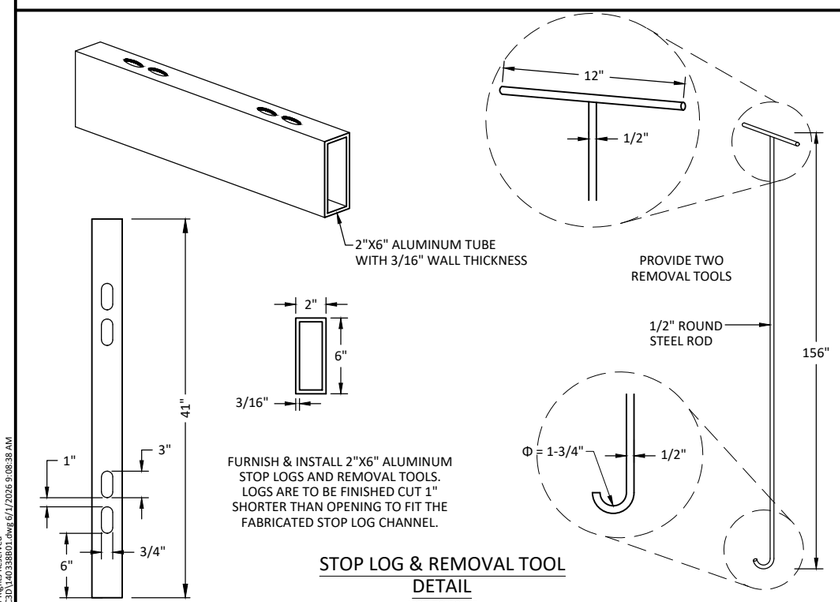

STOP LOG & REMOVAL TOOL DETAIL

NOT TO SCALE

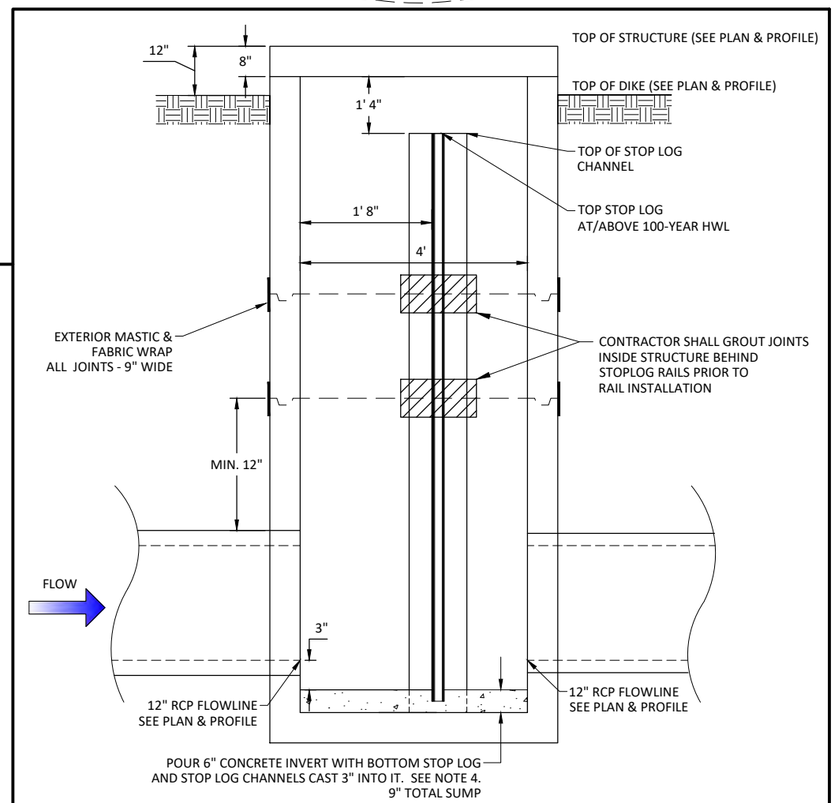

SW-402 WATER CONTROL OUTLET STRUCTURE SECTION

NOT TO SCALE

COVER/STOP LOG STORAGE NOTES:

1. PROVIDE HALLIDAY PRODUCTS MODEL S1R3648 (OR APPROVED EQUAL) 36" x 48" ALUMINUM ACCESS DOOR WITH LOCKING MECHANISM AND LIFTING HANDLE.
2. TOP OF STRUCTURE SHALL BE AN 8" THICK REINFORCED PRECAST TOP WITH ALUMINUM ACCESS DOOR CAST INTO TOP.
3. PROVIDE 24" GRATE AND COLLAR (AGRI DRAIN GR24 GRATE AND GRC24 COLLAR OR APPROVED EQUAL) FOR STOP LOG STORAGE.
4. PADLOCKS FOR ACCESS DOOR AND STOP LOG STORAGE TUBE SHALL BE KEYED ALIKE. FOUR KEYS ARE TO BE SUPPLIED UPON PROJECT COMPLETION.

STOP LOG CHANNEL NOTES:

1. ALL STEEL SHALL BE FY=36 KSI.
2. ANCHORS SHALL BE GALVANIZED STEEL FURNISHED W/NUTS, WASHERS AND LOCK WASHERS.
3. STOP LOG CHANNEL SHALL BE FURNISHED AS ONE CONTINUOUS PIECE W/CONTINUOUS WELDS.
4. ALL STEEL STOP LOG CHANNEL COMPONENTS ARE TO BE GALVANIZED AFTER WELDING AND DRILLING IS COMPLETE.
5. CONTRACTOR IS TO APPLY SEALANT VERY GENEROUSLY TO BACKSIDE OF STOP LOG CHANNEL TO ENSURE WATERTIGHT SEAL. SEALANT SHALL BE SIKA 30 YEAR INDUSTRIAL CAULK IN LIMESTONE GREY OR APPROVED EQUIVALENT.

WATER CONTROL STRUCTURE NOTES:

1. STRUCTURE FABRICATION AND INSTALLATION SHALL CONFORM TO SUDAS 6010.302 SW-402 RECTANGULAR STORM SEWER MANHOLE
2. STRUCTURE SHOP DRAWINGS ARE REQUIRED FOR ENGINEER'S REVIEW AND APPROVAL BEFORE FABRICATION OF WATER CONTROL STRUCTURE.
3. PRECAST WATER CONTROL STRUCTURE SHALL BE SUPPLED IN 2 OR 3 SECTIONS, PLUS AN 8" THICK COVER SECTION. SECTION SIZE IS LEFT TO CONTRACTOR'S DISCRETION EXCEPT BOTTOM SECTION SHALL INCLUDE BASE AND WALLS TO 12" ABOVE INLET HOLE.
4. A CONCRETE INVERT IS TO BE INSTALLED AFTER STOP LOG CHANNEL IS INSTALLED. THE BOTTOM STOP LOG IS TO BE CAST INTO THE INVERT WITH THREE HALF INCH DIA. "J BOLTS" FASTENED TO THE BOTTOM STOP LOG. NO LIFTING HOLES ARE REQUIRED FOR THIS BOTTOM LOG.
5. ALL SECTIONS OF THE STRUCTURE ARE TO HAVE "TONGUE AND GROOVE" JOINTS SEALED WITH O RING GASKETS IN THE JOINT AND MASTIC AND FABRIC WRAP ON THE STRUCTURE EXTERIOR.
6. INTERIOR JOINTS SHALL BE FILLED AND SEALED TO PREVENT WATER FLOW IN JOINT BEHIND STOP LOG CHANNEL USING EITHER CONCRETE GROUT OR MASTIC.
7. A-LOK (OR EQUIVALENT) WATERTIGHT SEAL IS REQUIRED FOR UPSTREAM PIPE CONNECTION TO THE WATER CONTROL STRUCTURE. CONCRETE COLLAR IS REQUIRED FOR DOWNSTREAM CONNECTION.
8. MANHOLE STEPS ARE TO BE INSTALLED FOR MAINTENANCE ACCESS TO THE STOP LOGS. STEPS ARE TO BE PER SUDAS SECTION 6010-2-2.13.
9. ENSURE THAT ALL JOINTS ARE WATER-TIGHT AND PROPERLY SEALED

© Bolton & Menk, Inc. 2026, All Rights Reserved
h:\IDALS\25x140338000\CAD\C3D\140338801.dwg 6/1/2026 9:08:38 AM

BOLTON & MENK
1519 BALTIMORE DRIVE
AMES, IA 50010
Phone: (515) 233-6100
Email: Ames@bolton-menk.com
www.bolton-menk.com

DESIGNED	REV	DESCRIPTION	DATE
BCS	1.1	FINAL DESIGN REV. 1	02-25-2026
DRAWN NVD			
CHECKED JPR			
CLIENT PROJ. NO. 25X.140338.000			

IOWA DEPARTMENT OF AGRICULTURE AND LAND STEWARDSHIP

IDALS PROJ. NO. CLA953734C

WATER CONTROL STRUCTURE DETAILS

SHEET B.01

DESIGN SHEET PILING AREA

SHEET PILING REQUIREMENTS

MINIMUM SECTION MODULUS OF 34.6 CUBIC INCHES PER FOOT OF WALL.
MINIMUM GRADE OF STEEL IS 36 KSI.
MINIMUM MOMENT OF INERTIA OF 305 INCHES ^ 4 PER FOOT OF WALL.
ALL SHEETING SHALL MEET ASTM A-328, A-572 GR50 OR A-690.

APPROVED PRODUCTS

SHORELINE STEEL SZ-14.5
JD FIELDS PZC 12
GERDAU AMERISTEEL PZC 13, PZC 12
NUCOR SKYLINE SCZ 14

OTHER SHEETING MAY BE ALLOWED WITH PRIOR APPROVAL OF ENGINEER. ALL MATERIALS ARE BASED ON MINIMUM COVERAGE AND FURTHER SIZING WILL NEED TO BE DONE. SIZING IS BASED ON INSTALLED STRENGTH. CONTRACTOR SHALL CONSIDER CONSTRUCTIBILITY WHEN SELECTING A SHEET PILE SIZE.

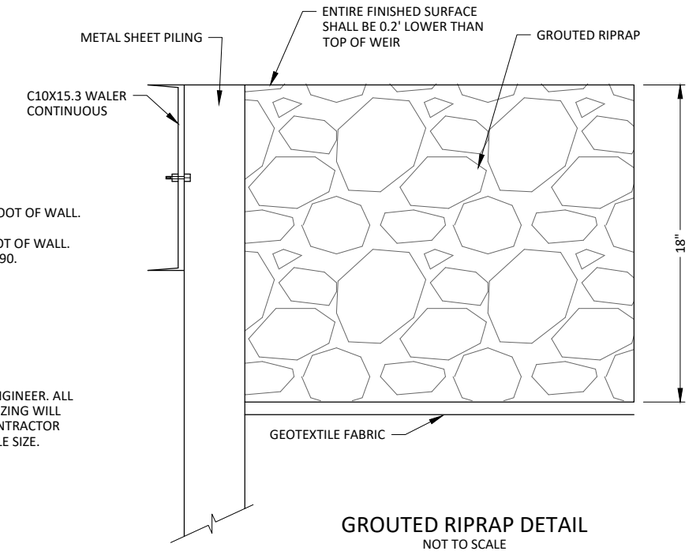

GROUTED RIPRAP DETAIL
NOT TO SCALE

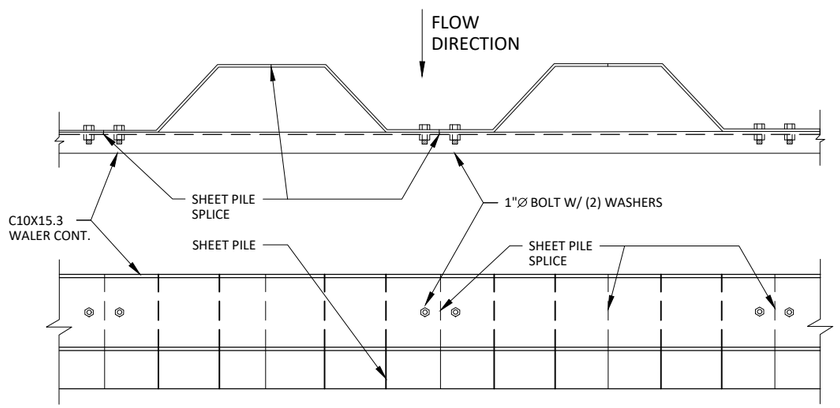

WALER BOLT PLACEMENT
NOT TO SCALE

HORZ. 0 25 50 SCALE FEET

VERT. 0 5 10 SCALE FEET

NOTES:

1. ALL BOLTS WILL BE 1" DIA. WITH 2 WASHERS. BOLT SHALL BE EXTENDED AT A MINIMUM OF $\frac{3}{8}$" BEYOND THE NUT.
2. ALL HOLES SHALL BE DRILLED $\frac{1}{16}$" LARGER IN DIAMETER THAN THE BOLT.
3. THE WALER SHALL BE PLACED ON THE DOWNSTREAM SIDE OF THE WEIR.
4. ANY HOLES LEFT IN SHEET PILE (LIFTING HOLES ETC.) SHALL BE WELDED CLOSED.
5. AFTER SHEETING AND WALER INSTALLATION ALL SHEETING ON THE WEIR IS TO BE CUT TO CONFORM WITH 3:1 SLOPE AND THE DESIGN ELEVATIONS.
6. STRUCTURAL STEEL SHALL BE FABRICATED AND ERECTED IN ACCORDING WITH THE LATEST SPECIFICATION OF AISC. FABRICATOR SHALL SUBMIT SHOP DRAWINGS SHOWING THAT PLANNED STEEL WILL COMPLETELY COVER INTENDED WALL AREA. FABRICATE AFTER ENGINEERS REVIEW.
7. DEFLECTIONS SHALL BE MADE IN FABRICATED PIECES AND STILL CONFORM TO THE DIMENSIONS GIVEN.
8. IT IS THE CONTRACTOR'S RESPONSIBILITY TO DETERMINE ALLOWABLE CONSTRUCTION LIVE LOADS.
9. PROVIDE ALL NECESSARY TEMPORARY BRACING, SHORING, GUYING OR OTHER MEANS TO AVOID EXCESSIVE STRESSES AND TO HOLD STRUCTURAL ELEMENTS IN PLACE DURING CONSTRUCTION.

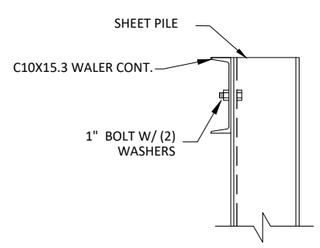

NOTE: 1 BOLT TO BE PLACED ON EACH SIDE OF SPLICE

BOLT DETAIL
NOT TO SCALE

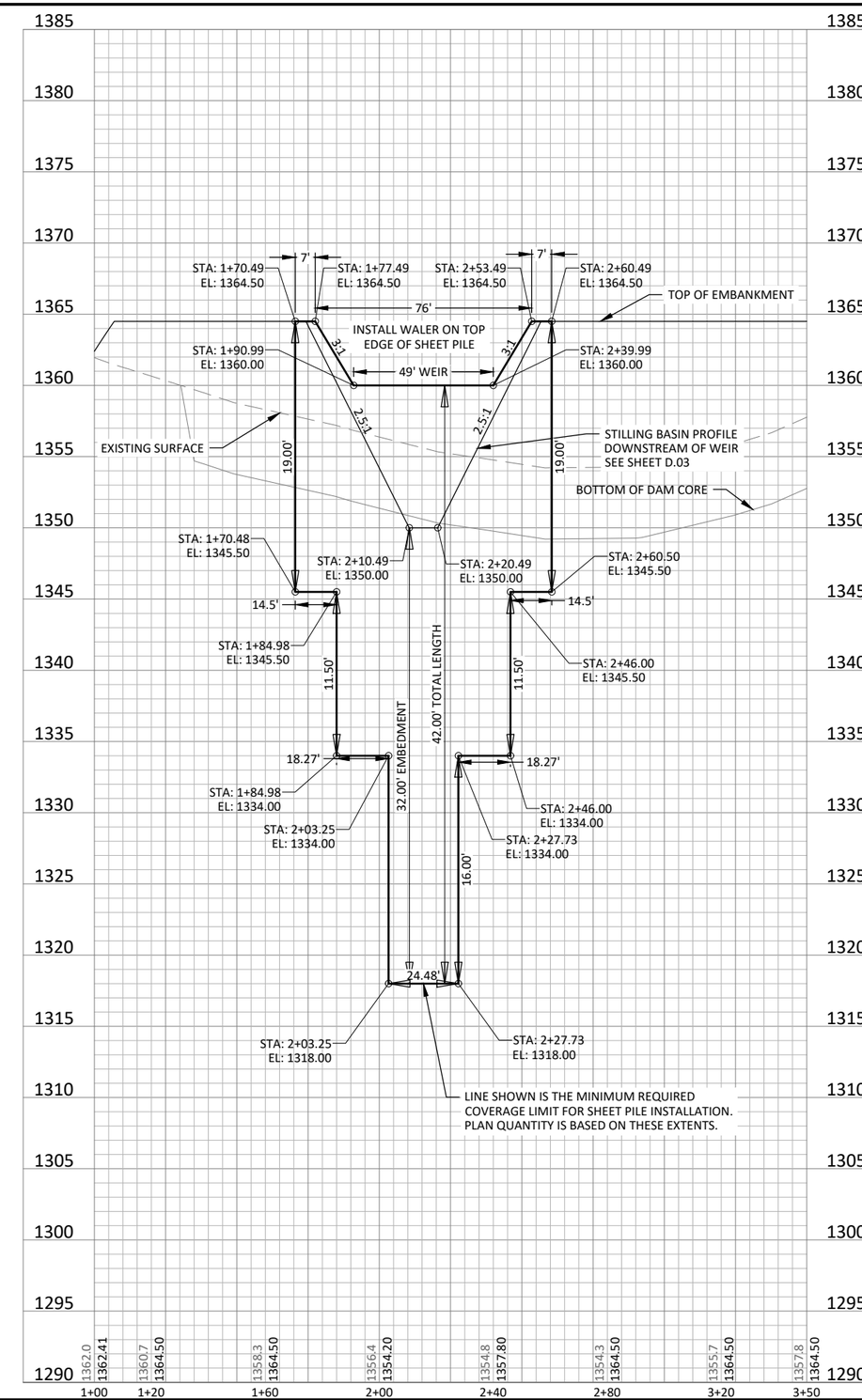

©Bolton & Menk, Inc. 2026, All Rights Reserved
h:\IDALS\25x140338000\CAD\C3D\140338801.dwg 6/1/2026 9:08:42 AM

BOLTON & MENK
1519 BALTIMORE DRIVE
AMES, IA 50010
Phone: (515) 233-6100
Email: Ames@bolton-menk.com
www.bolton-menk.com

DESIGNED	BCS
DRAWN	NVD
CHECKED	JPR
CLIENT PROJ. NO.	25X.140338.000

REV	DESCRIPTION	DATE
1.1	FINAL DESIGN REV. 1	02-25-2026

IOWA DEPARTMENT OF AGRICULTURE AND LAND STEWARDSHIP
IDALS PROJ. NO. CLA953734C
SHEET PILE DETAILS

SHEET B.02

CORRUGATED POLYETHYLENE DRAINAGE TUBING
MATERIAL & INSTALLATION NOTES

1. ALL CPDT AND CONNECTORS FURNISHED SHALL BE IN COMPLIANCE WITH MATERIAL STANDARDS ASTM F405 AND F667, AS APPLICABLE, AND SHALL BE CLASSIFIED AS HEAVY-DUTY UNDER THOSE STANDARDS.
2. EXCEPT MODIFIED HEREIN OR OTHERWISE APPROVED BY ENGINEER, ALL CPDT SHALL BE INSTALLED IN COMPLIANCE WITH THE ASTM 449 STANDARD PRACTICE.
3. FOR PIPES 6" DIAMETER AND SMALLER A 90° V GROOVE BOTTOM MAY BE USED, FOR ALL LARGER PIPE A TRAPEZOIDAL BOTTOM OR A CIRCULAR BOTTOM CONFORMING TO THE OUTSIDE DIAMETER OF THE PIPE SHALL BE USED. PRIOR TO THE INSTALLATION OF CPDT, CONTRACTOR MUST PROVE TO ENGINEER THAT THE INSTALLATION REQUIREMENTS, INCLUDING THE SHAPE OF THE TRENCH BOTTOM, WILL BE ACCOMPLISHED.
4. WHERE TRENCH BOTTOM IS IN FIRM UNDISTURBED SOIL, SHAPE TRENCH BASE GROOVE. WHERE EXCESS CUT OCCURS, OVEREXCAVATE AND PLACE MINIMUM THREE (3) INCH THICK, GRAVELLY SAND BEDDING TO RESTORE GRADE. THIS BEDDING SHALL MEET THAT REQUIRED FOR TRENCH INSTALLATION TYPE 3 ON PLAN SHEET B.02. THIS MATERIAL AND WORK SHALL BE INCIDENTAL TO THE INSTALLATION OF THE PIPE. CONTRACTOR MAY SUBSTITUTE PIPE BEDDING ROCK AS THE BEDDING MATERIAL.
5. NATIVE SOILS MAY BE USED AS BACKFILL MATERIAL UNLESS UNSTABLE TRENCH CONDITIONS PREVENT THE TRENCH BOTTOM HOLDING THE SHAPED GROOVE. IF TRENCH BOTTOM WILL NOT HOLD GROOVE SHAPE CONTRACTOR SHALL NOTIFY ENGINEER IMMEDIATELY. A FLAT BOTTOM TRENCH INSTALLATION WILL THEN BE ASSUMED. THE REQUIRED BEDDING MATERIAL SHALL BE INCIDENTAL TO THE INSTALLATION OF THE PIPE.
6. MINIMUM TRENCH WIDTH IS PIPE OUTSIDE DIAMETER PLUS FOUR (4) INCHES FOR PLOWED INSTALLATION AND PIPE OUTSIDE DIAMETER PLUS TWELVE (12) INCHES FOR OPEN TRENCH INSTALLATION.
7. ALL LATERAL CONNECTIONS, ELBOWS, TEES, ALIGNMENT CURVES, START HOLES AND ALL PORTIONS OF THE TRENCH NOT MEETING THE GROOVED TRENCH INSTALLATION REQUIREMENTS SHALL BE FILLED TO A MINIMUM OF SIX (6) INCH COVER OVER THE PIPE WITH GRADED CRUSHED STONE OR GRAVEL AS SHOWN ON TABLE 2 OF THIS SHEET. BEDDING MATERIAL SHALL BE INCIDENTAL TO THE INSTALLATION OF THE PIPE.
8. MANUFACTURER'S ENDCAPS SHALL BE INSTALLED AT THE TERMINATION OF EACH LINE UNLESS A CONNECTION TO AN EXISTING DRAIN IS MADE.
9. WITH THE INSTALLATION OF THE FIRST REACH OF CPDT ON THE PROJECT, CONTRACTOR IS REQUIRED TO WORK WITH THE ENGINEER TO CHECK AND CONFIRM THAT THE PIPE STRETCH, IF ANY, DOES NOT EXCEED 5%.
10. ALIGNMENT TURNS MAYBE MADE USING EITHER A MANUFACTURED FITTING OR CURVING THE LINE WITH A 25' MINIMUM RADIUS.

Table 1
Maximum Allowable Buried Depth to Flowline of CPDT

Nominal Pipe Diameter (IN)	Pipe Quality (ASTM)	Trench Width at Top of the Pipe (FT)			
		12"	18"	24"	30" or Greater
4	Standard	13	7	5.5	5
	Heavy-duty	Any	10	7	6
6	Standard	10	7	5.5	5
	Heavy-duty	Any	9.5	6.5	6
8	Standard	10	7	5.5	5
	Heavy-duty	Any	10	7	6
10	Heavy-duty	...	9	7	6
12	Heavy-duty	...	9	7	6
15	Heavy-duty	...	...	7	6

Table 2
Acceptable Bedding Material and Compaction Requirements

Description	Percentage Passing Sieve Sizes			Minimum Standard Density (%)	Maximum Compaction Layer Height (IN.)
	1"	3/4"	No. 4		
Crushed Stone Crushed Gravel*	100%	> 95%	< 5%	Dumped	18

* Class 1 Bedding Material Per SUDAS 3010.202A is an Allowable Substitute

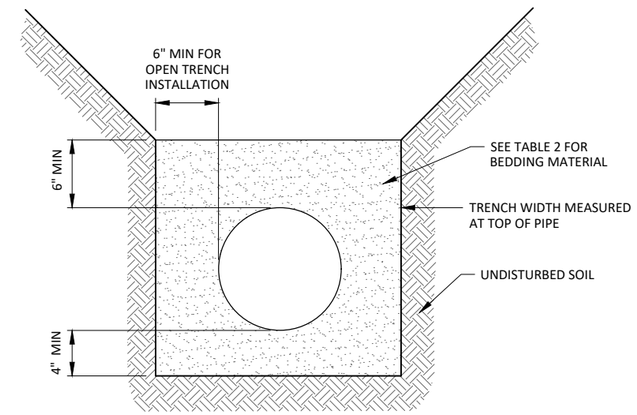

FILL TRENCH TO 6" ABOVE TOP OF PIPE WITH CRUSHED STONE OR GRAVEL MEETING THE REQUIREMENTS IN TABLE 2. BEDDING MATERIAL SHALL BE INCIDENTAL TO THE PIPE INSTALLATION.

FLAT BOTTOM TRENCH INSTALLATION
NOT TO SCALE
SOURCE: ASTM F449

NOTE: THIS IS AN ALLOWED ALTERNATIVE INSTALLATION FOR CPDT

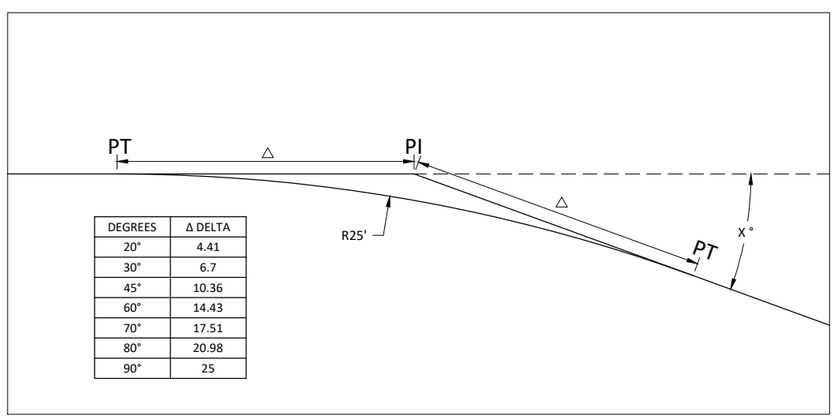

DEGREES	Δ DELTA
20°	4.41
30°	6.7
45°	10.36
60°	14.43
70°	17.51
80°	20.98
90°	25

THE CIRCULAR GROOVE SHALL BE A MINIMUM 0.35R DEEP AND SHALL MATCH THE OUTSIDE CURVE SHAPE OF THE DEFLECTED CPDT.

THE TRAPEZOIDAL GROOVE SHALL BE SHAPED AND ADJUSTED SUCH THAT POINTS A, B, & C WILL TOUCH THE UNDEFLECTED CPDT FOR EACH SIZE INSTALLED.

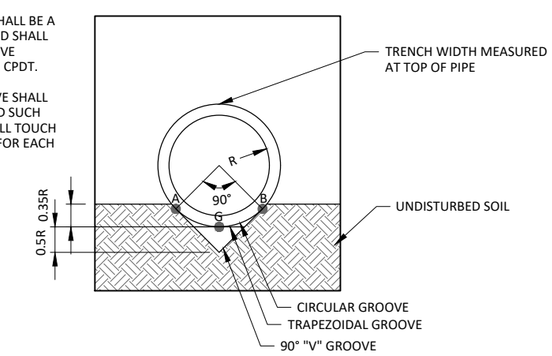

PREFFERED TRENCH INSTALLATION BOTTOM
TRAPEZOIDAL GROOVE, "V" GROOVE, & CIRCULAR GROOVE
NOT TO SCALE
SOURCE: ASTM F449

©Bolton & Menk, Inc. 2026, All Rights Reserved
h:\IDALS\25x140338000\CAD\CID\140338B01.dwg 6/1/2026 9:08:47 AM

BOLTON & MENK
1519 BALTIMORE DRIVE
AMES, IA 50010
Phone: (515) 233-6100
Email: Ames@bolton-menk.com
www.bolton-menk.com

DESIGNED	REV	DESCRIPTION	DATE
BCS	1.1	FINAL DESIGN REV. 1	02-25-2026
DRAWN NVD			
CHECKED JPR			
CLIENT PROJ. NO. 25X.140338.000			

IOWA DEPARTMENT OF AGRICULTURE AND LAND STEWARDSHIP
IDALS PROJ. NO. CLA953734C
CPDT INSTALLATION DETAILS

SHEET B.03

PIPE HAUNCH FILL AND COMPACTION METHOD
PLAN REQUIREMENTS COMPLIANCE VERIFICATION

THE CONTRACTOR IS SOLEY RESPONSIBLE FOR THE INSTALLATION OF ALL PIPE ACCORDING TO PLAN REQUIREMENTS. THE CONTRACTOR'S PARTICIPATION IN AND COMPLIANCE WITH THE FOLLOWING PROCEDURE IS REQUIRED AND WILL ALLOW FOR FEWER SOIL DENSITY TESTS TO ENSURE PROPER PIPE INSTALLATION.

STEP 1
BEFORE COMMENCING PIPE INSTALLATION, STANDARD SOIL PROCTOR DENSITY TEST RESULTS OF REPRESENTATIVE SAMPLE(S) OF PIPE HAUNCH FILL SHALL BE PROVIDED BY AN INDEPENDENT QUALIFIED SOILS TESTING LAB. THE SELECTION OF THE SAMPLE(S) WILL BE MADE BY THE ENGINEER AND CONTRACTOR (WHEN SPECIFIED).

STEP 2
CONTRACTOR MAY BEGIN EXCAVATING THE MODIFIED TYPE 4 TRENCH
WITH THE REQUIRED SHAPED BOTTOM GROOVE AND PLACE SEVERAL PIPE SECTIONS ONLY WHEN BOTH ENGINEER AND TESTING LAB TECHNICIAN ARE PRESENT

CONTRACTOR SHALL DEMONSTRATE THE INTENDED METHODS FOR COMPACTING THE FILL FOR THE PIPE HAUNCH AREAS. SOIL DENSITY TESTS SHALL BE TAKEN AT LOCATIONS DESIGNATED BY THE ENGINEER TO CONFIRM THAT THE INTEDNED METHODS FOR FILL AND COMPACTION OF THE PIPE HAUNCH AREAS SATIFIES THE PLAN REQUIREMENTS. CONTRACTOR SHALL MODIFIY THE INSTALLATION METHODS AND REPEAT STEP 2 UNTIL ACCEPTABLE TESTS RESULTS ARE ACHIEVED.

STEP 3
CONTRACTOR MAY INSTALL THE NEXT SEVERAL HUNDRED FEET OF PIPE. ENGINEER SHALL DESIGNATE SEVERAL LOCATIONS (APPROXIMATELY 10% OF THE INSTALLED LENGTH) WHERE CONTRACTOR SHALL LEAVE THE PIPE UNBLINDED FOR FURTHER DENSITY TESTS OF THE HAUNCH FILL AREA. ALL DENSITY TESTS MUST MEET PLAN REQUIREMENTS BEFORE WORK MAY PROCEED FURTHER.

IF DENSITY TESTING DATA CONFIRMS TO THE SATISFACTION OF THE ENGINEER THAT THE CONTRACTOR'S INSTALLATION METHOD WILL PRODUCE CONSISTENT COMPLIANCE WITH PLAN REQUIREMENTS, CONTRACTOR MAY CONTINUE INSTALLATION OF THE PIPE WITH NO ADDITIONAL TESTING REQUIRED. IF NOT, STEPS 2 AND 3 SHALL BE REPEATED UNTIL A RELIABLE, SUCCESSFUL METHOD OF PIPE INSTALLATION THAT PRODUCES SATISFACTORY RESULTS IS ESTABLISHED.

CONTRACTOR IS REQUIRED TO PROPERLY AND ADEQUATELY INSTRUCT SUBCONTRACTORS AND/OR SUBSEQUENT PIPE INSTALLATION WORKERS ON THE PROPER INSTALLATION METHOD.

STEP 4A
SOIL OR TRENCH CONDITION CHANGES

TO VERIFY CONTRACTOR'S COMPLIANCE WITH PLAN REQUIREMENTS UNDER THE CHANGED CONDITIONS, ENGINEER MAY STOP WORK AND REQUIRE ADDITIONAL SOIL PROCTOR TESTS AND/OR SOIL DENSITY TESTS SIMILAR TO STEPS 1 THROUGH 3. THE WORK AND COSTS OF THE FIRST TWO REVERIFICATIONS IS SUBSIDIARY TO THE PIPE INSTALLATION. SUBSEQUENT VERIFICATIONS WILL BE CONSIDERED EXTRA WORK.

STEP 4B
CONTRACTOR FAILS TO CONSISTENTLY PERFORM INSTALLATION METHOD OR INSTRUCT OTHER INSTALLERS

IF CONTRACTOR FAILS TO CONSISTENTLY PERFORM OR ADEQUATELY INSTRUCT SUBCONTRACTORS AND/OR SUBSEQUENT PIPE INSTALLATION WORKERS ON THE APPROVED INSTALLATION METHOD, ENGINEER MAY STOP WORK AND REQUIRE ADDITIONAL SOIL PROCTOR TESTS AND/OR SOIL DENSITY TESTS SIMILAR TO STEPS 1 THROUGH 3 TO VERIFY CONTRACTOR'S COMPLIANCE WITH PLAN REQUIREMENTS. THE WORK AND COSTS OF ALL VERIFICATIONS UNDER SUCH CONDITIONS IS SUBSIDIARY TO THE PIPE INSTALLATION.

EXCEPTION
IF CONTRACTOR ELECTS TO SHAPE THE TRENCH BOTTOM SUCH THAT A MINIMUM OF 45% OF THE OUTER CIRCUMFERENCE OF THE PIPE IS FIRMLY BEDDED IN AND CONSISTENTLY SUPPORTED BY UNDISTURBED SOIL, PIPE HAUNCH FILL COMPACTION TESTING WILL NOT BE REQUIRED. THE CONTRACTOR IS REQUIRED TO COMPLY WITH A PROPER INSTALLATION METHOD AND TO FULLY COMPLY WITH THE REQUIREMENTS OF THE VERIFICATION OUTLINED ABOVE FOR ALL SITUATIONS WHERE THIS EXCEPTION IS NOT MET.

CRUSHED ROCK MEETING THE GRADATION OF SUDAS CLASS I BEDDING MATERAL, SPECIFICATION SECTION 3010.2.02.A, MAY BE SUBSTITUTED FOR THE SAND OR CLAY HAUNCH BACKFILL MATERIAL. NO COMPACTION WILL BE REQUIRED FOR THE CRUSHED ROCK BEDDING AND BACKFILL. MATERIAL COSTS SHALL BE INCIDENTAL TO PIPE INSTALLATION.

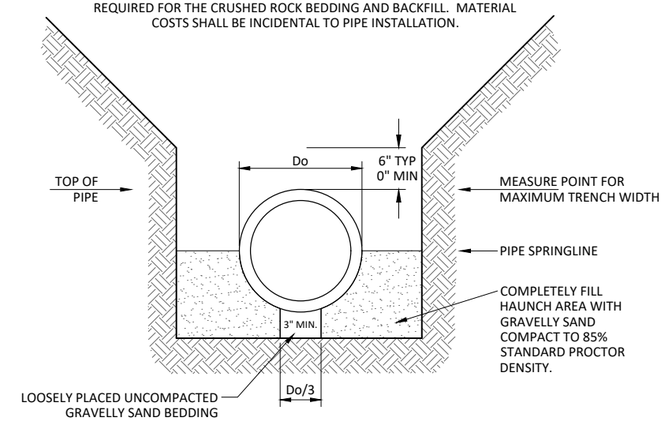

GRAVELLY SAND BEDDING SHALL BE CONSISTENT WITH THE GRADATION AND OTHER CHARACTERISTICS OF STANDARD AASHTO A1 OR A3 SOIL. A REPRESENTATIVE SAMPLE OF THE MATERIAL AND A GRADATION REPORT OR SUPPLIER'S CERTIFICATION OF COMPLIANCE SHALL BE SUBMITTED TO THE ENGINEER FOR APPROVAL PRIOR TO DELIVERY TO SITE. SEE SOIL DATA IN APPENDIX OF SPECIFICATIONS BOOKLET.

TRENCH INSTALLATION TYPE 3

NOT TO SCALE
SOURCE: AMERICAN CONCRETE PIPE ASSOCIATION
CONCRETE PIPE DESIGN MANUAL

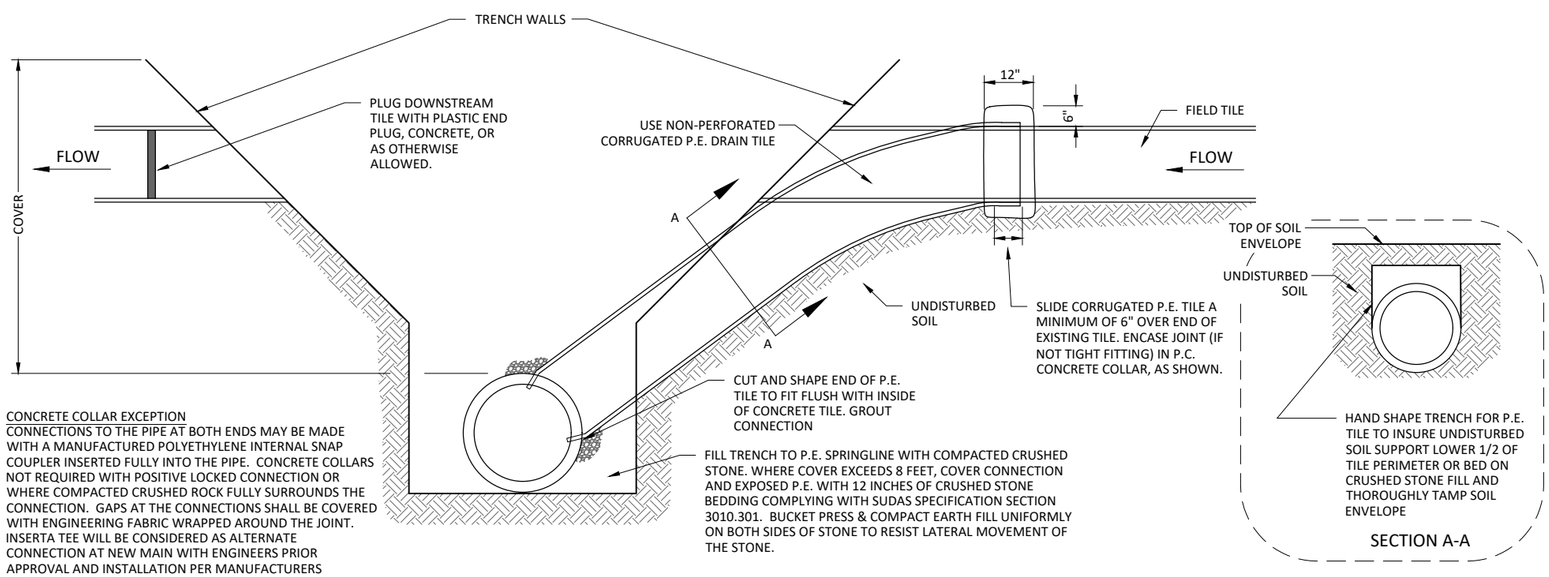

CONCRETE COLLAR EXCEPTION
CONNECTIONS TO THE PIPE AT BOTH ENDS MAY BE MADE WITH A MANUFACTURED POLYETHYLENE INTERNAL SNAP COUPLER INSERTED FULLY INTO THE PIPE. CONCRETE COLLARS NOT REQUIRED WITH POSITIVE LOCKED CONNECTION OR WHERE COMPACTED CRUSHED ROCK FULLY SURROUNDS THE CONNECTION. GAPS AT THE CONNECTIONS SHALL BE COVERED WITH ENGINEERING FABRIC WRAPPED AROUND THE JOINT. INSERTA TEE WILL BE CONSIDERED AS ALTERNATE CONNECTION AT NEW MAIN WITH ENGINEERS PRIOR APPROVAL AND INSTALLATION PER MANUFACTURERS RECOMMENDATION.

TYPICAL FIELD TILE CONNECTION

FOR FIELD TILE UP TO 10" DIAMETER

MINIMUM TRENCH WIDTH SHALL BE OUTSIDE DIAMETER OF PIPE PLUS 12" OR THAT WIDTH WHICH IS REQUIRED FOR COMPACTION, WHICHEVER IS GREATER

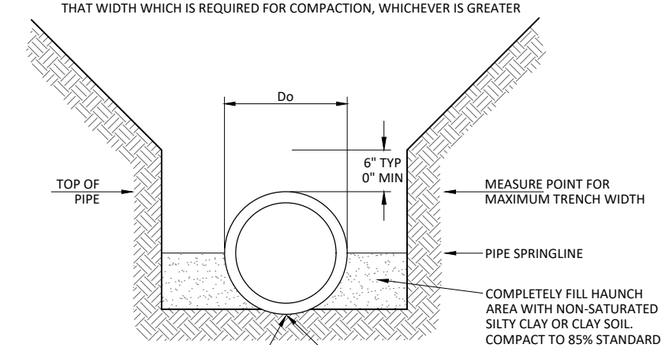

WHERE TRENCH BOTTOM IN FIRM UNDISTURBED SOIL, SHAPE TRENCH BASE GROOVE TO MATCH MINIMUM 1/6 OF THE OUTER CIRCUMFERENCE OF THE PIPE. WHERE THE SHAPED GROOVE CANNOT BE CONSTRUCTED INTO UNDISTURBED GROUND OR WHERE EXCESS CUT OCCURS OVER EXCAVATE AND PLACE MINIMUM 3-INCH THICK COMPACTED GRAVELLY SAND BEDDING TO RESTORE GRADE SUCH THAT 1/6 OR MORE OF THE OUTER CIRCUMFERENCE OF THE PIPE IS BEDDED. THIS MATERIAL AND WORK IS SUBSIDIARY TO THE INSTALLATION OF THE PIPE. CONTRACTOR MAY SUBSTITUTE PIPE BEDDING ROCK AS THE BEDDING MATERIAL. IT ALSO IS SUBSIDIARY.

WHERE FIRM BASE IS NOT ENCOUNTERED. OVER EXCAVATE AS DIRECTED BY ENGINEER. PLACE CRADLING ROCK AND BED PIPE IN IT SUCH THAT 1/6 OR MORE OF THE OUTER CIRCUMFERENCE OF THE PIPE IS SUPPORTED. THIS ROCK IS PAID FOR UNDER A SEPARATE BID ITEM.

MODIFIED TRENCH INSTALLATION TYPE 4

NOT TO SCALE
SOURCE: AMERICAN CONCRETE PIPE ASSOCIATION
CONCRETE PIPE DESIGN MANUAL

©Bolton & Menk, Inc. 2026, All Rights Reserved
h:\IDALS\25x140338000\CAD\C3D\140338B01.dwg 6/1/2026 9:08:52 AM

BOLTON & MENK
1519 BALTIMORE DRIVE
AMES, IA 50010
Phone: (515) 233-6100
Email: Ames@bolton-menk.com
www.bolton-menk.com

DESIGNED	REV	DESCRIPTION	DATE
BCS	1.1	FINAL DESIGN REV. 1	02-25-2026
DRAWN NVD			
CHECKED JPR			
CLIENT PROJ. NO. 25X.140338.000			

IOWA DEPARTMENT OF AGRICULTURE AND LAND STEWARDSHIP
IDALS PROJ. NO. CLA953734C
RCP INSTALLATION DETAILS

SHEET B.04

OUTLET RISER DETAIL

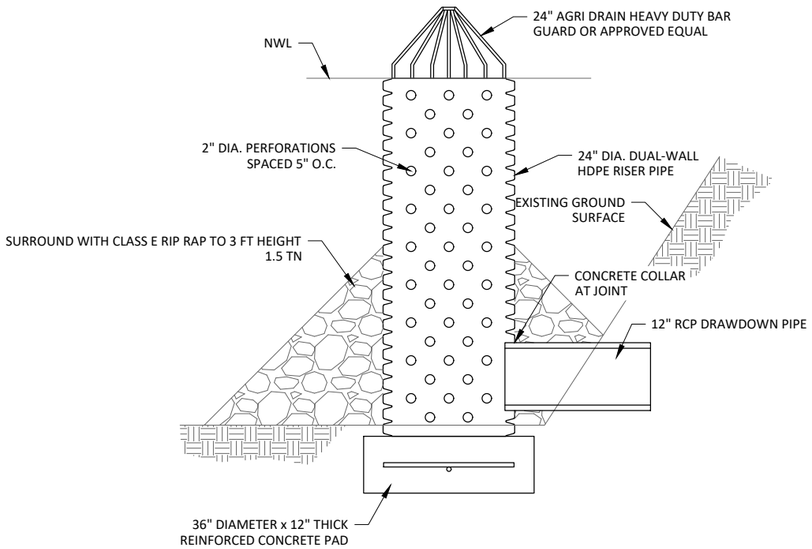

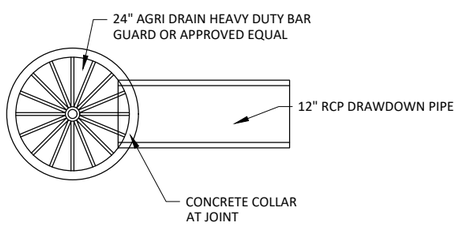

ANTI-SEEP COLLAR DETAILS

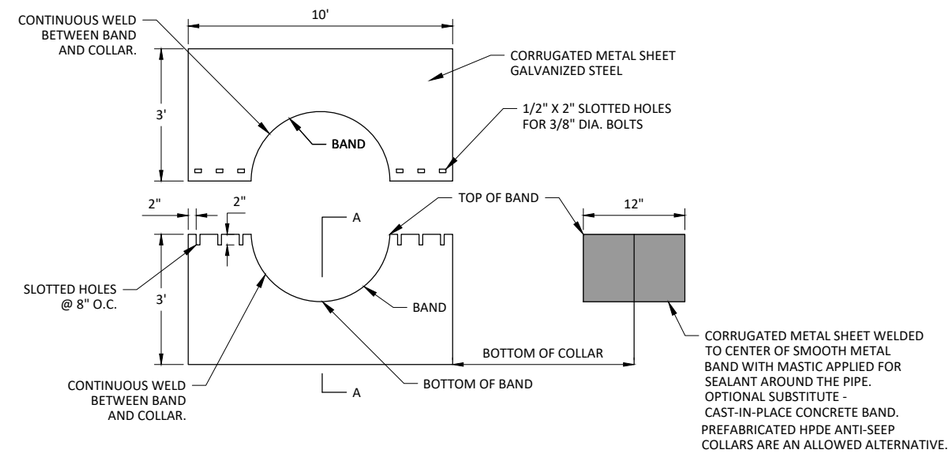

ALTERNATIVE 1: RCP ANTI-SEEP COLLAR

NOT TO SCALE

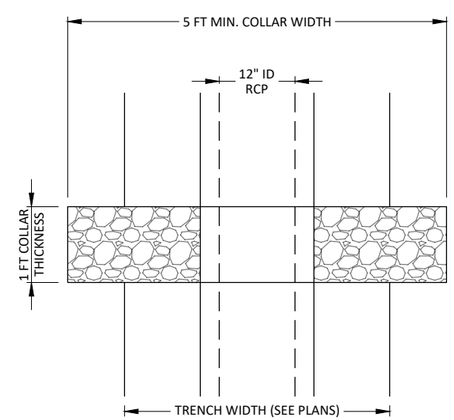

NOTES:

1. COMPOSITE BENTONITE AGGREGATE (CBA) SHALL BE AQUABLOK OR APPROVED EQUAL.
2. COLLAR SHALL EXTEND 1.75 FT BELOW BOTTOM OF PIPE AND 1.75 FT ABOVE TOP OF PIPE
3. COLLAR SHALL BE A MINIMUM OF 5 FT WIDE AND EXTEND A MINIMUM OF 6" BEYOND EDGE OF TRENCH
4. NO COMPACTION OF CBA IS REQUIRED.
5. EXCAVATE AND BACKFILL THE REMAINDER OF THE TRENCH AS NOTED IN THE PLANS.

ALTERNATIVE 2: COMPOSITE BENTONITE AGGREGATE COLLAR

NOT TO SCALE

©Bolton & Menk, Inc. 2026, All Rights Reserved
h:\IDALS\25x140338000\CAD\C3D\140338B01.dwg 6/1/2026 9:08:57 AM

BOLTON & MENK
1519 BALTIMORE DRIVE
AMES, IA 50010
Phone: (515) 233-6100
Email: Ames@bolton-menk.com
www.bolton-menk.com

DESIGNED	REV	DESCRIPTION	DATE
BCS	1.1	FINAL DESIGN REV. 1	02-25-2026
DRAWN NVD			
CHECKED JPR			
CLIENT PROJ. NO. 25X.140338.000			

IOWA DEPARTMENT OF AGRICULTURE AND LAND STEWARDSHIP

IDALS PROJ. NO. CLA953734C

MISCELLANEOUS DETAILS

SHEET B.05

Bid Item	Sub-Item	Description	Specifications		Plan No.	Estimated Quantities	
			No.	Page		Quantity	Unit
1	-	Site Stripping & Preparation	IA CS-001	3-4	A.02	1	LS
2	-	Crop Damage	IA CS-001	3-4	-	0	AC
3	-	Structure & Channel Seeding	IA CS-006	7-10	K.01	2.1	AC
4	-	Buffer Seeding	IA CS-006	7-10	K.01	13.1	AC
5	-	Mobilization and Demobilization	IA CS-008	11-12	-	1	LS
6	-	Drain Tile Investigation and Removal					
	1	Tile Removal	IA CS-009	14-17	A.03	8	HR
	2	Tile Abandonment	IA CS-009	14-17	A.03	1	LS
7	-	Steel Sheet Piling	IA CS-013	20-21	B.02, D.02	2523	SF
8	-	Excavation (General)	IA CS-021	22-24	D.01	10944	CY
9	-	Earthfill (General)	IA CS-023	25-28	D.01, D.05	1210	CY
10	-	Earthfill (General Dam)	IA CS-023	25-28	D.02	2283	CY
11	-	Earthfill (Dam Core)	IA CS-023	25-28	D.02	767	CY
12	-	Drainfill, Fine	IA CS-024	29-31	D.02	23	CY
13	-	Topsoil Strip, Salvage, and Respread	IA CS-026	32-33	D.01	3073	CY
14	-	12" Dia. Reinforced Concrete Pipe	IA CS-031	34-40	D.02	16	LF
15	-	12" Dia. Reinforced Concrete Pipe (Gasketed)	IA CS-031	34-40	M.02	136	LF
16	-	30" Dia. Reinforced Concrete Pipe	IA CS-031	34-40	M.01	805	LF
17	-	Modified SW-402 Water Control Structure	IA CS-031	34-40	B.01, M.02	1	EA
18	-	12" Dia. Reinforced Concrete Apron, Footing, Bar Guard	IA CS-031	34-40	M.02	1	EA
19	-	30" Dia. Reinforced Concrete Apron, Footing, Bar Guard	IA CS-031	34-40	M.01	1	EA
20	-	6" Dia. Corrugated HDPE Pipe (Single-Wall; Perforated)	IA CS-046	41-44	D.02, M.02	335	LF
21	-	6" Dia. Corrugated HDPE Pipe (Single-Wall; Non-Perforated)	IA CS-046	41-44	M.02	205	LF
22	-	Stoplog Storage Structure	IA CS-046	41-44	B.01	1	EA
23	-	Outlet Riser Structure	IA CS-046	41-44	B.05, M.02	1	EA
24	-	Anti-Seep Collars	IA CS-051	45-47	B.05, M.02	2	EA
25	-	Rip Rap (Class E)	IA CS-061	48-49	D.03, M.01-M.02	383	TN
26	-	Grout for Rip Rap	IA CS-062	50-52	D.04	46	CY

©Bolton & Menk, Inc. 2026, All Rights Reserved
h:\IDALS\25x140338000\CAD\C3D\140338C01.dwg 6/1/2026 9:09:05 AM

BOLTON & MENK
1519 BALTIMORE DRIVE
AMES, IA 50010
Phone: (515) 233-6100
Email: Ames@bolton-menk.com
www.bolton-menk.com

DESIGNED BCS
DRAWN NVD
CHECKED JPR
CLIENT PROJ. NO. 25X.140338.000

REV	DESCRIPTION	DATE
1.1	FINAL DESIGN REV. 1	02-25-2026

IOWA DEPARTMENT OF AGRICULTURE AND LAND STEWARDSHIP
IDALS PROJ. NO. CLA953734C
ESTIMATED QUANTITIES

SHEET C.01

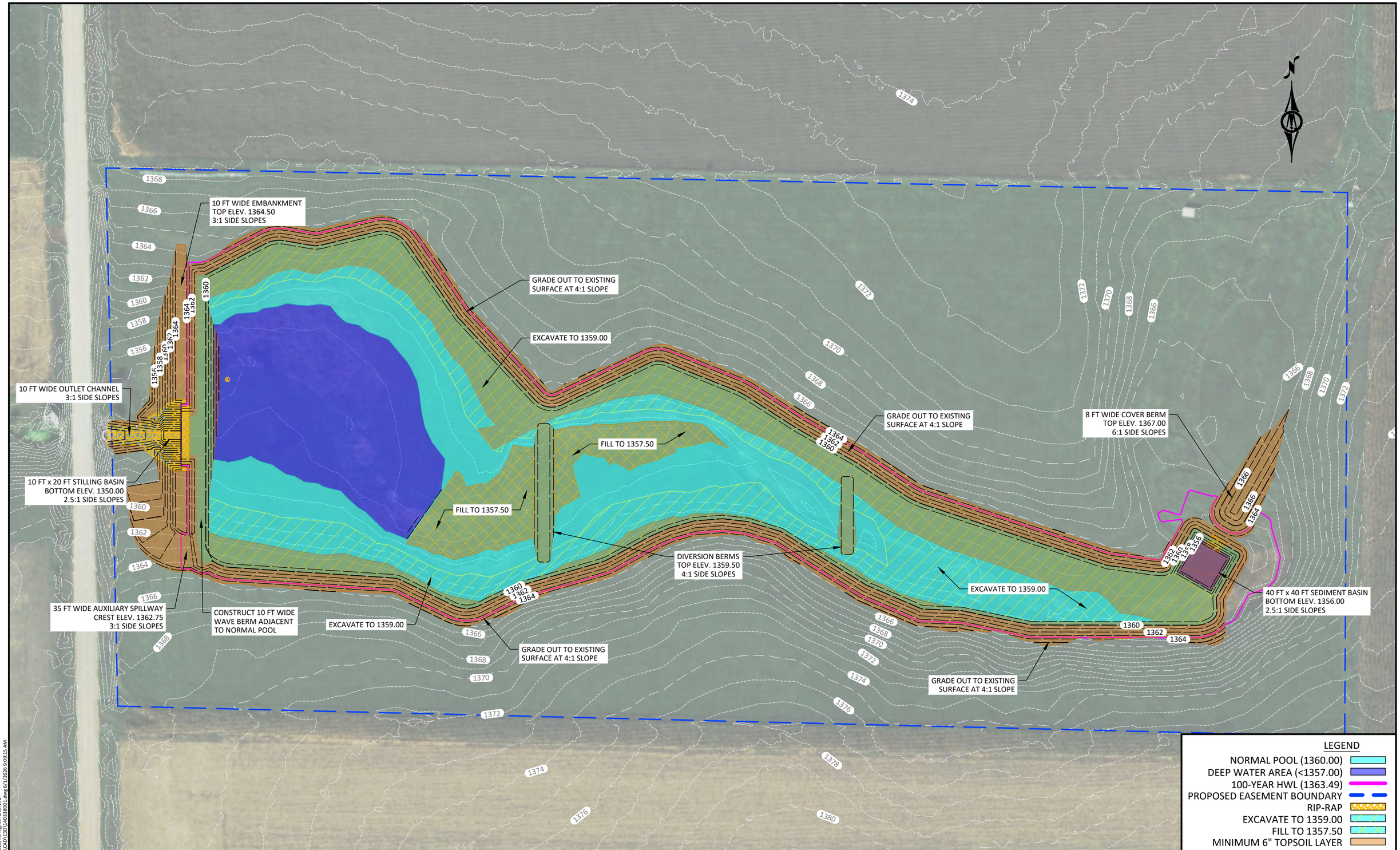

HORZ. 0 50 100
SCALE FEET

BOLTON & MENK

1519 BALTIMORE DRIVE
AMES, IA 50010
Phone: (515) 233-6100
Email: Ames@bolton-menk.com
www.bolton-menk.com

DESIGNED	REV	DESCRIPTION	DATE
BCS	1.1	FINAL DESIGN REV. 1	02-25-2026
DRAWN NVD			
CHECKED JPR			
CLIENT PROJ. NO. 25X.140338.000			

IOWA DEPARTMENT OF AGRICULTURE AND LAND STEWARDSHIP

IDALS PROJ. NO. CLA953734C

GRADING OVERVIEW

SHEET D.01

© Bolton & Menk, Inc. 2025, All Rights Reserved
h:\IDALS\25x140338000\CAD\C3D\140338D01.dwg 6/1/2026 9:09:15 AM

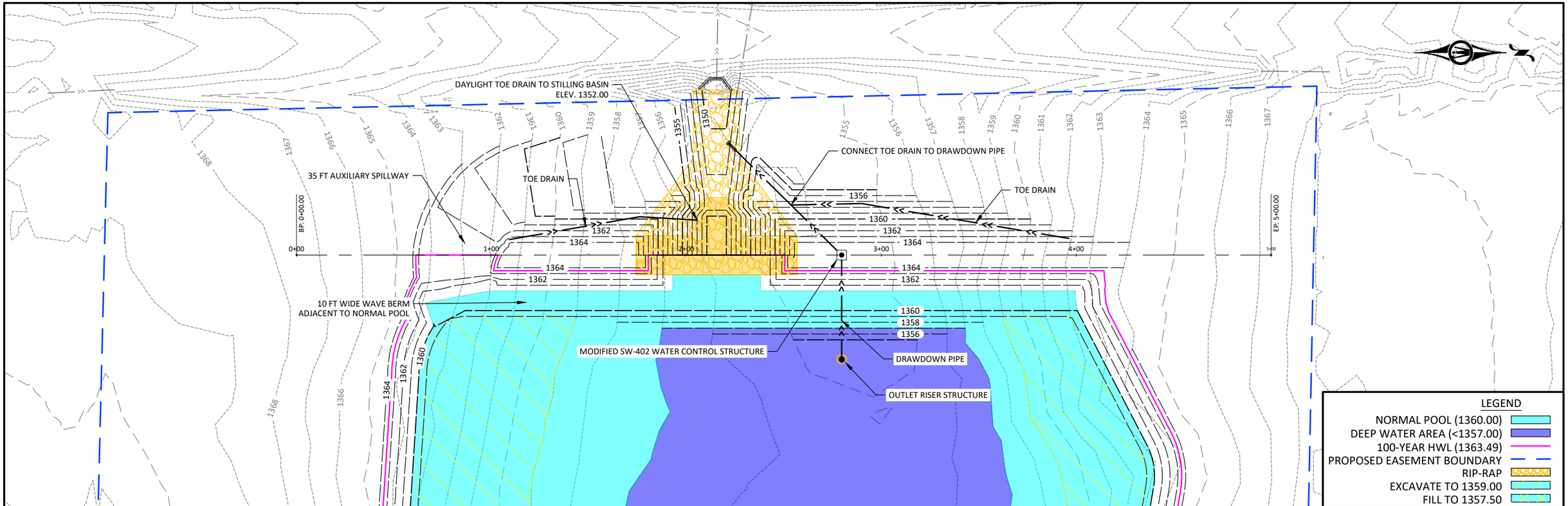

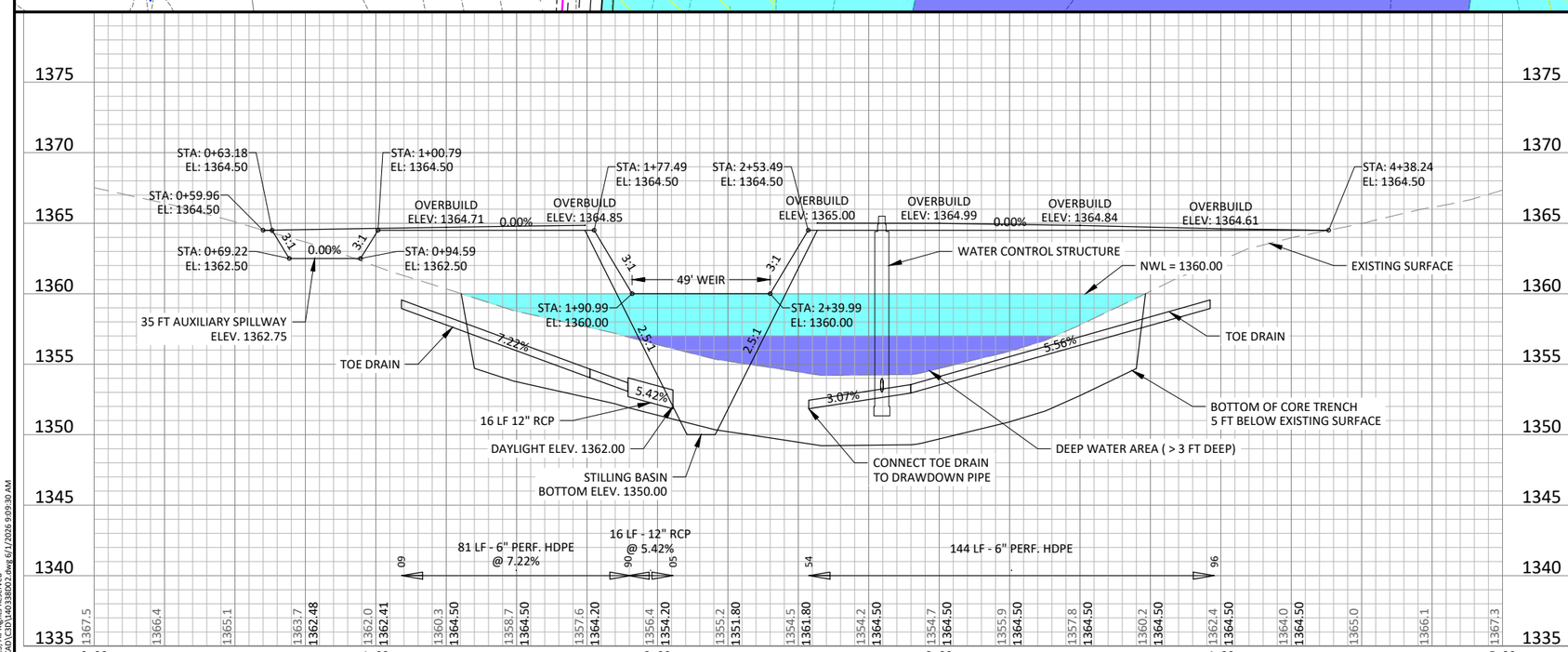

EMBANKMENT CROSS SECTION

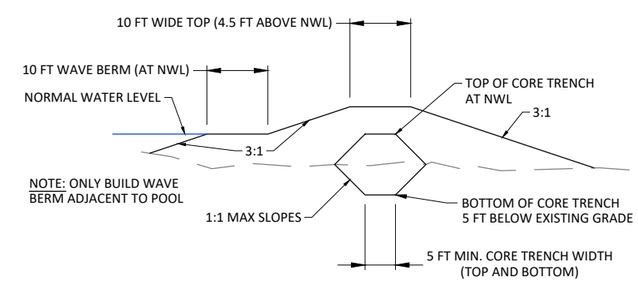

TOE DRAIN CROSS SECTION

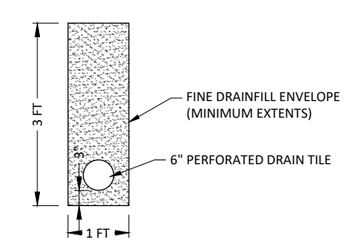

HORZ. 0 25 50 SCALE FEET

VERT. 0 5 10 SCALE FEET

BOLTON & MENK

1519 BALTIMORE DRIVE
AMES, IA 50010
Phone: (515) 233-6100
Email: Ames@bolton-menk.com
www.bolton-menk.com

DESIGNED	BCS
DRAWN	NVD
CHECKED	JPR
CLIENT PROJ. NO.	25X.140338.000

REV	DESCRIPTION	DATE
1.1	FINAL DESIGN REV. 1	02-25-2026

IOWA DEPARTMENT OF AGRICULTURE AND LAND STEWARDSHIP

IDALS PROJ. NO. CLA953734C

PLAN & PROFILE - EMBANKMENT

SHEET D.02

©Bolton & Menk, Inc. 2025, All Rights Reserved
h:\IDALS\25x140338000\CAD\C3D\140338002.dwg 8/1/2026 9:09:30 AM

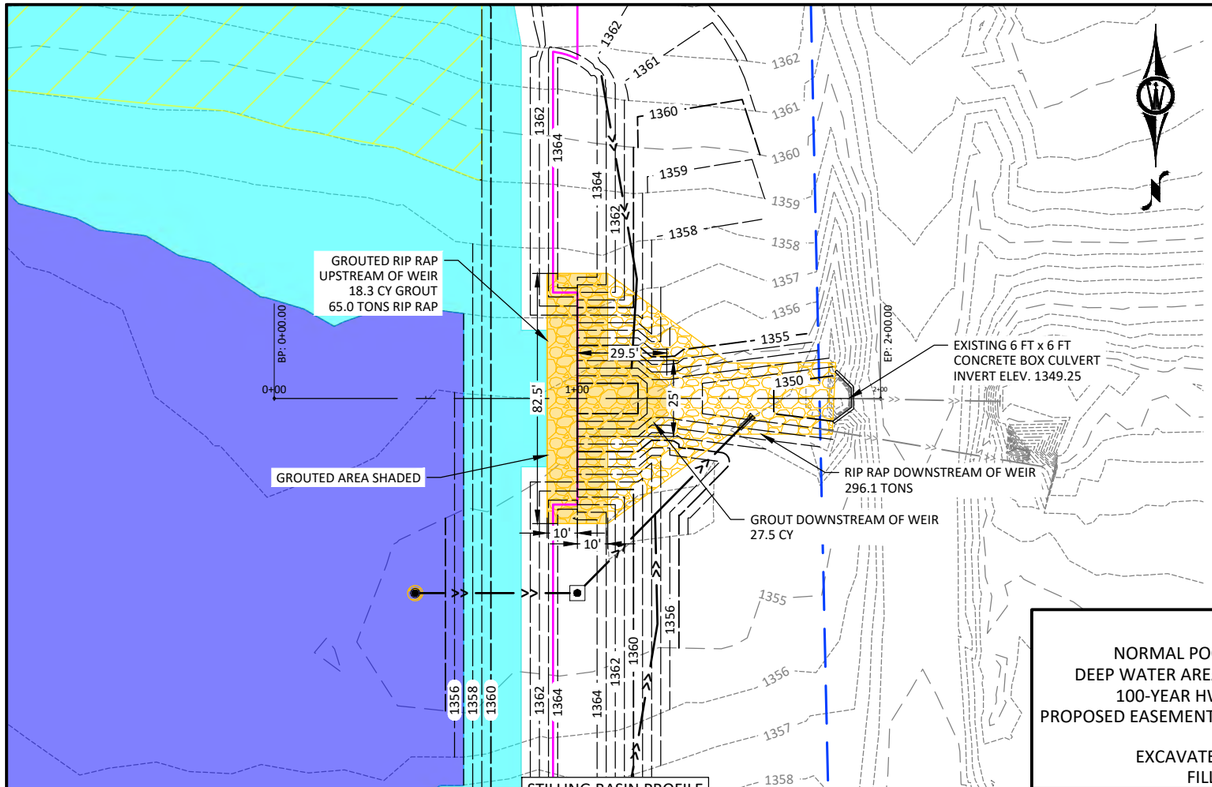

STILLING BASIN PROFILE

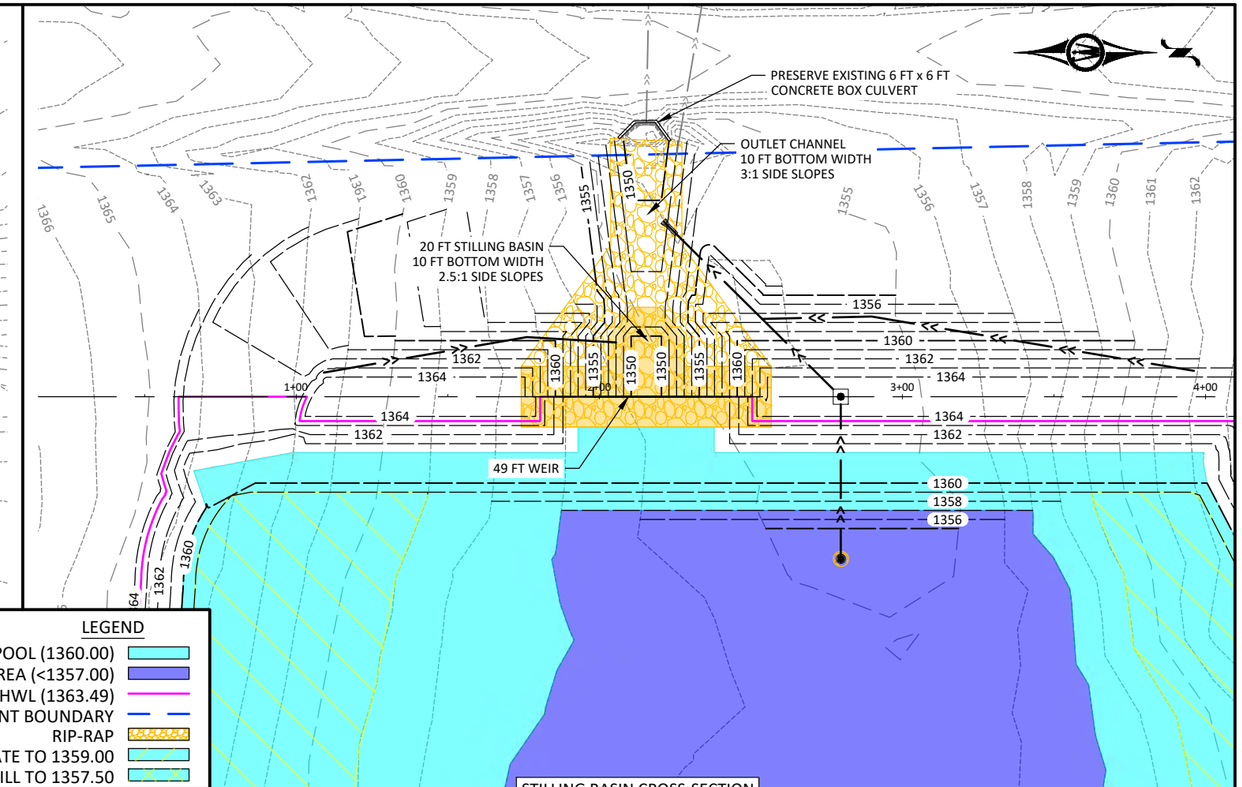

STILLING BASIN CROSS-SECTION

LEGEND

- NORMAL POOL (1360.00)
- DEEP WATER AREA (<1357.00)
- 100-YEAR HWL (1363.49)
- PROPOSED EASEMENT BOUNDARY
- RIP-RAP
- EXCAVATE TO 1359.00
- FILL TO 1357.50

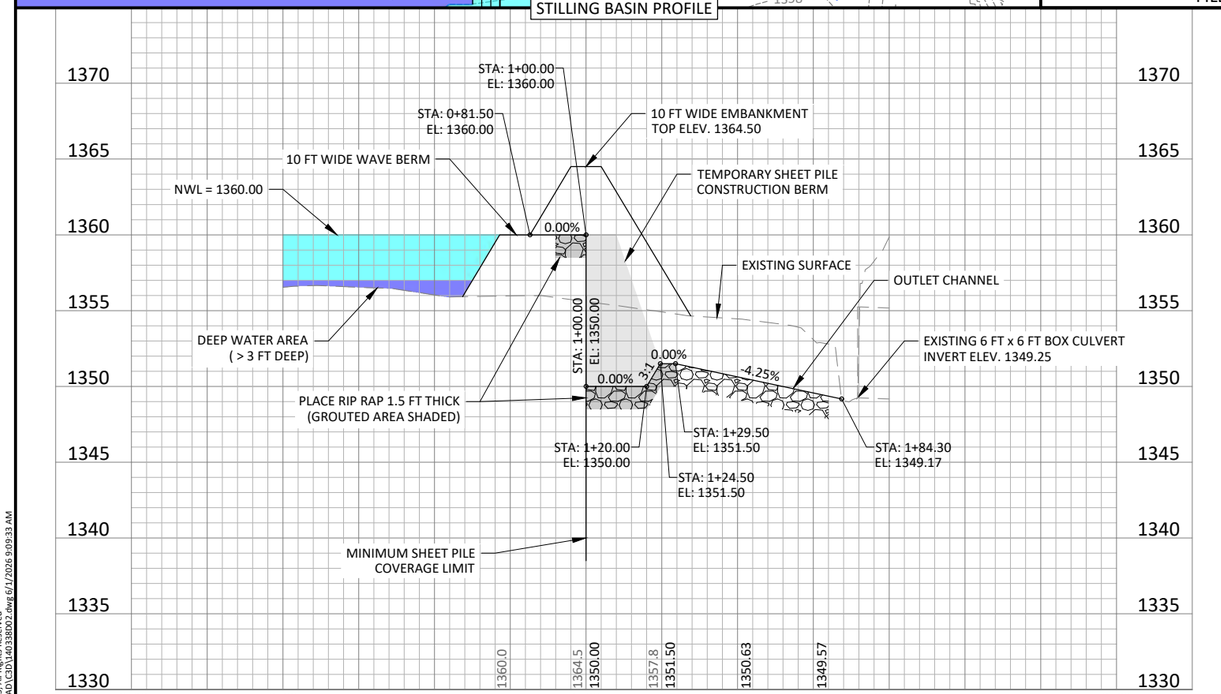

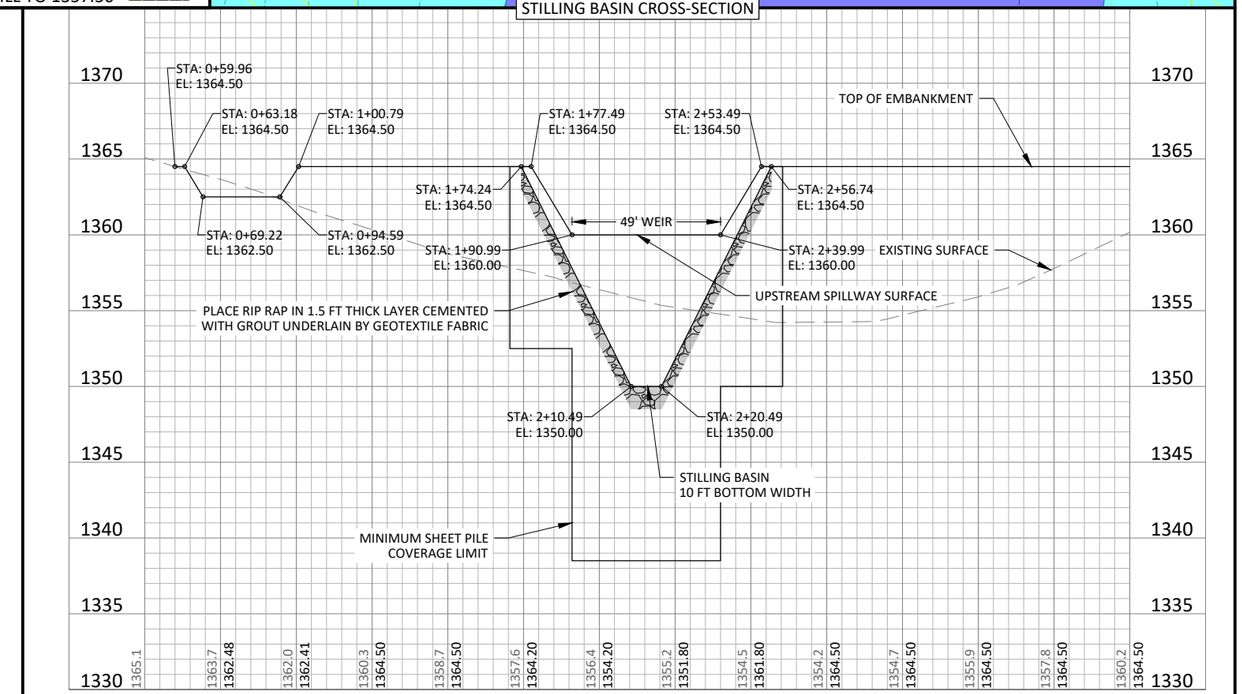

HORZ. 0 25 50 SCALE FEET

VERT. 0 5 10 SCALE FEET

BOLTON & MENK
1519 BALTIMORE DRIVE
AMES, IA 50010
Phone: (515) 233-6100
Email: Ames@bolton-menk.com
www.bolton-menk.com

DESIGNED	REV	DESCRIPTION	DATE
BCS	1.1	FINAL DESIGN REV. 1	02-25-2026
DRAWN NVD			
CHECKED JPR			
CLIENT PROJ. NO. 25X.140338.000			

IOWA DEPARTMENT OF AGRICULTURE AND LAND STEWARDSHIP

IDALS PROJ. NO. CLA953734C

PLAN & PROFILE - STILLING BASIN & OUTLET CHANNEL

SHEET D.03

©Bolton & Menk, Inc. 2025, All Rights Reserved
h:\IDALS\25x140338000\CAD\C3D\140338002.dwg 6/1/2026 9:09:33 AM

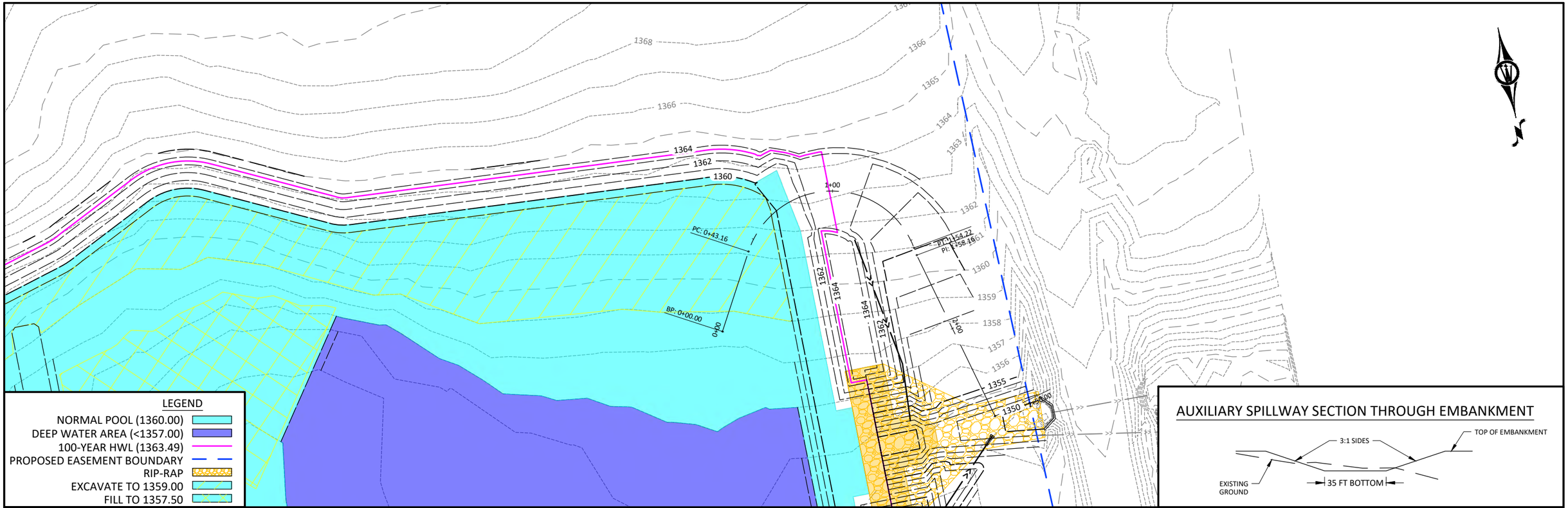

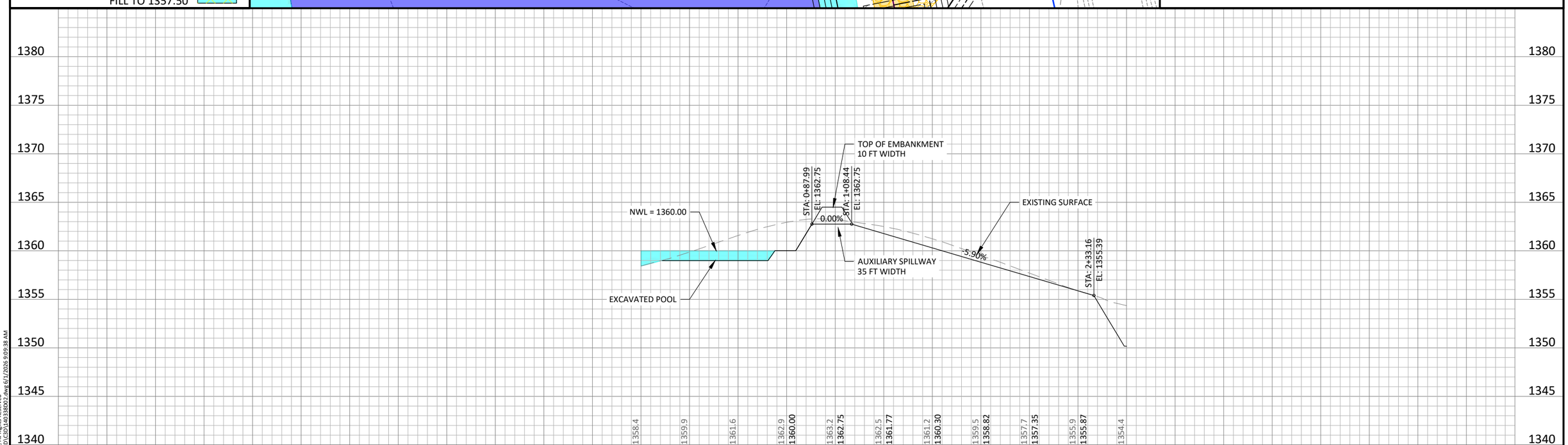

HORZ. 0 25 50 SCALE FEET

VERT. 0 5 10 SCALE FEET

BOLTON & MENK

1519 BALTIMORE DRIVE
AMES, IA 50010
Phone: (515) 233-6100
Email: Ames@bolton-menk.com
www.bolton-menk.com

DESIGNED	BCS
DRAWN	NVD
CHECKED	JPR
CLIENT PROJ. NO.	25X.140338.000

REV	DESCRIPTION	DATE
1.1	FINAL DESIGN REV. 1	02-25-2026

IOWA DEPARTMENT OF AGRICULTURE AND LAND STEWARDSHIP

IDALS PROJ. NO. CLA953734C

PLAN & PROFILE - AUXILIARY SPILLWAY

SHEET D.04

©Bolton & Menk, Inc. 2025, All Rights Reserved
h:\IDALS\25x140338000\CAD\C3D\140338002.dwg 8/1/2026 9:09:38 AM

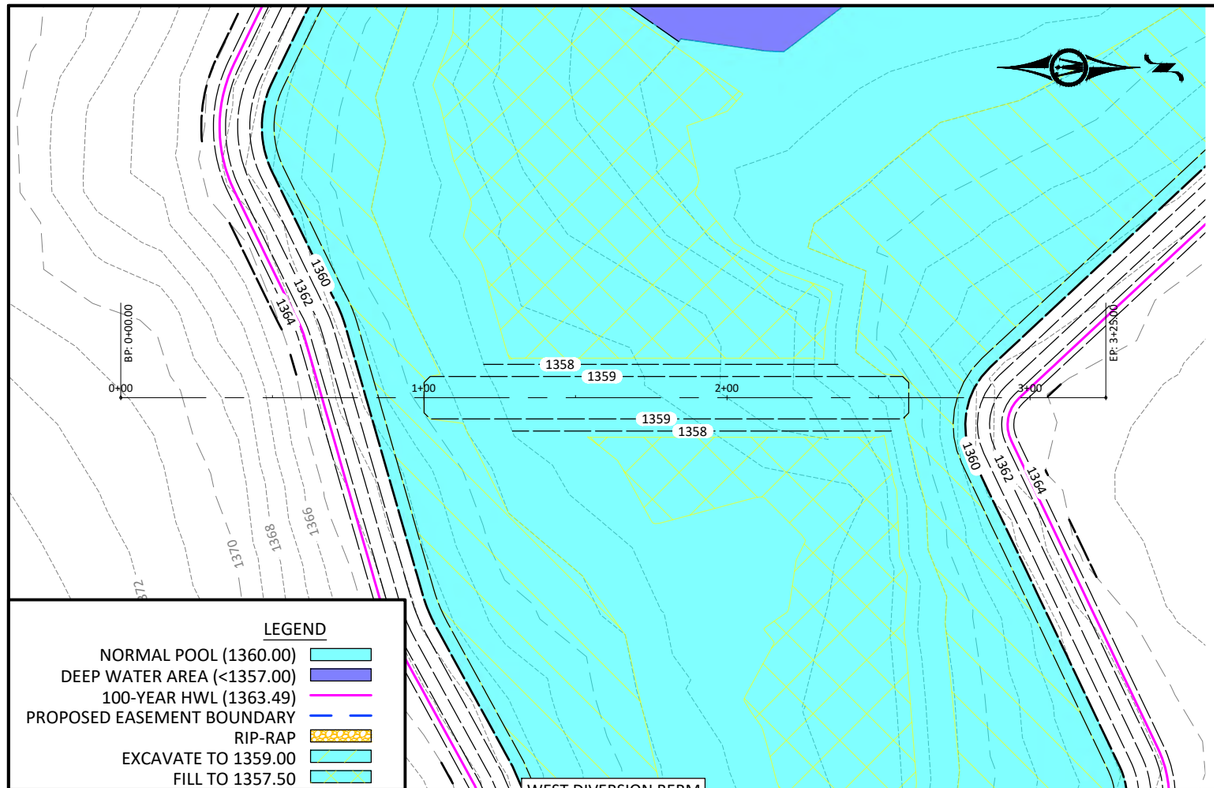

WEST DIVERSION BERM

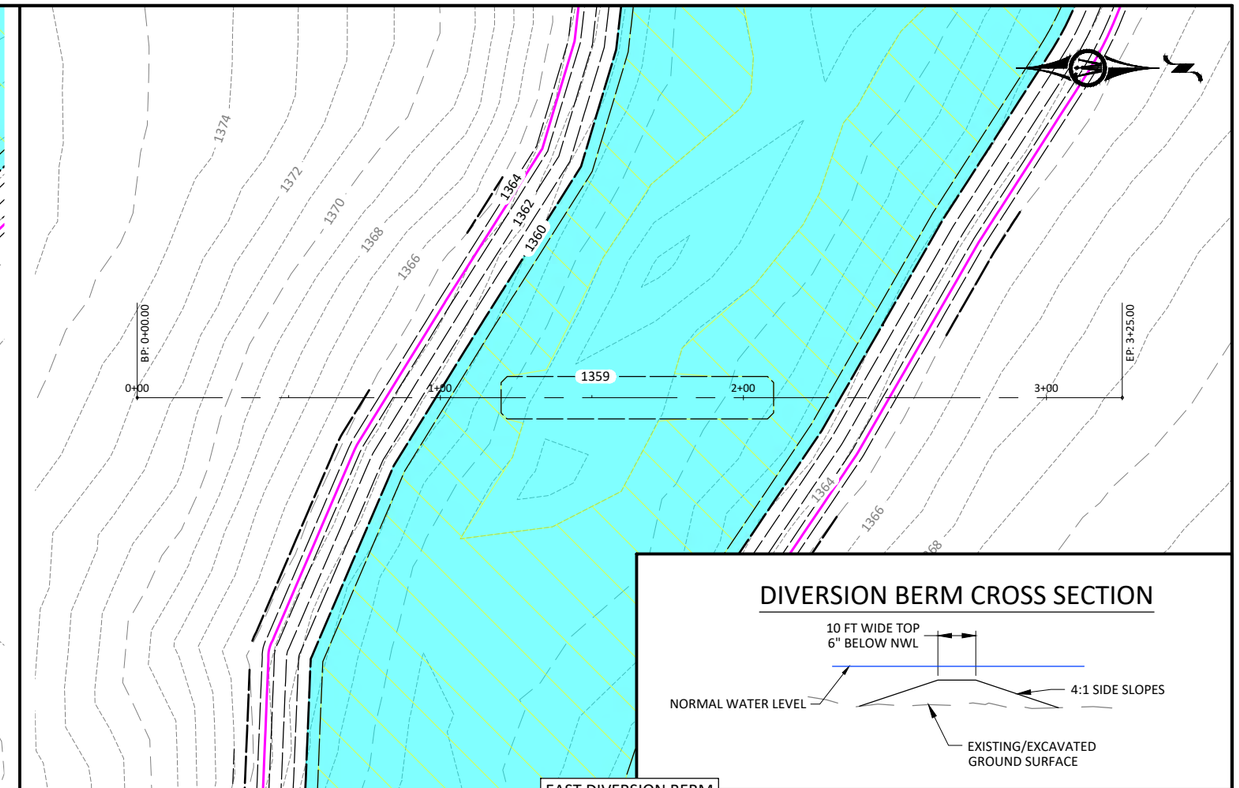

EAST DIVERSION BERM

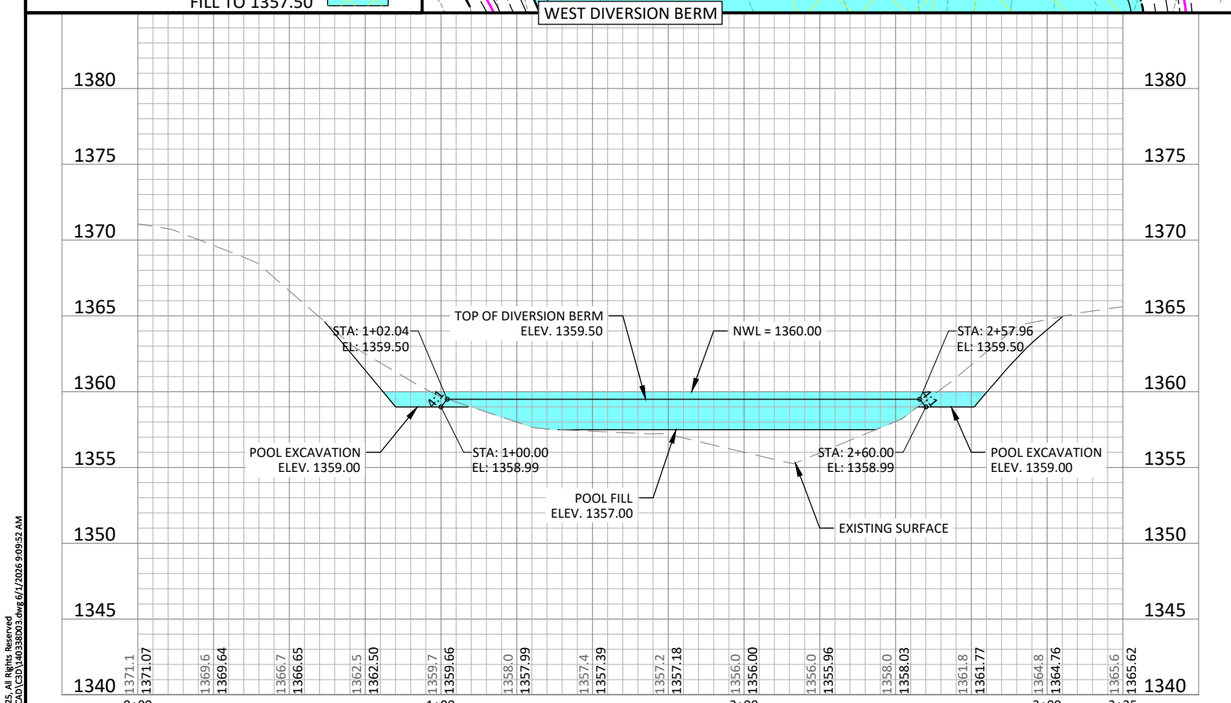

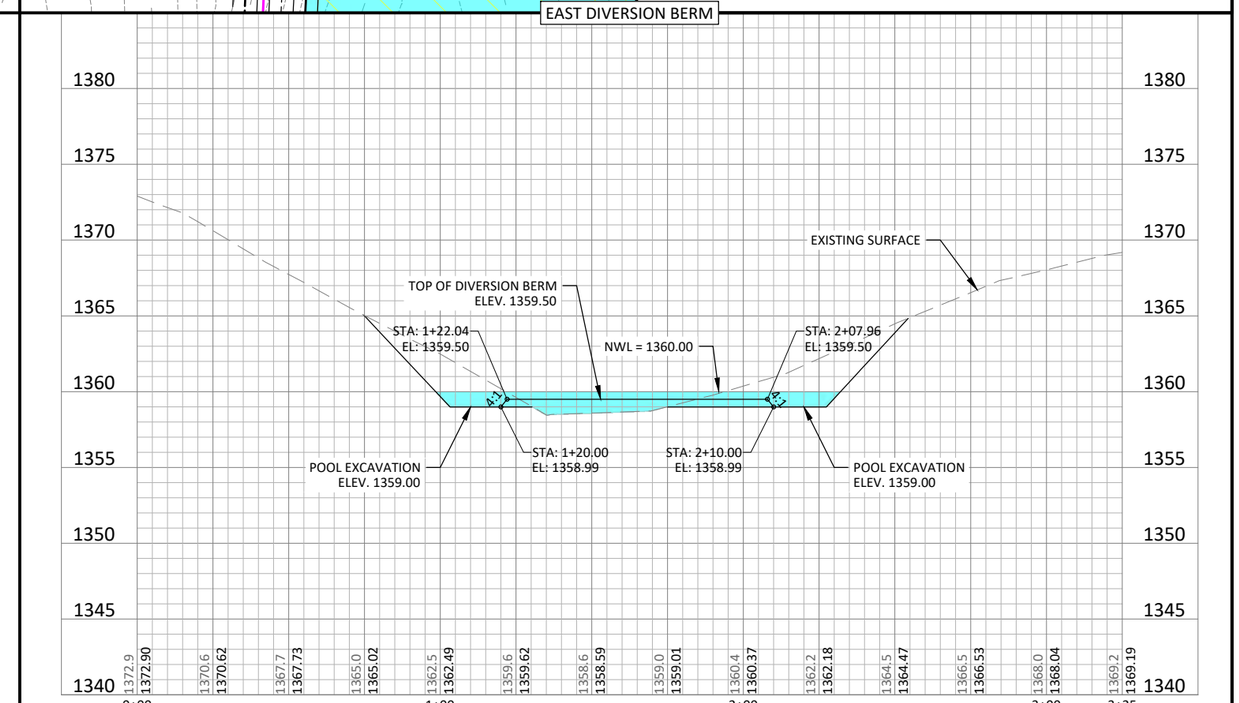

HORZ. 0 25 50 SCALE FEET

VERT. 0 5 10 SCALE FEET

BOLTON & MENK

1519 BALTIMORE DRIVE
AMES, IA 50010
Phone: (515) 233-6100
Email: Ames@bolton-menk.com
www.bolton-menk.com

DESIGNED	BCS
DRAWN	NVD
CHECKED	JPR
CLIENT PROJ. NO.	25X.140338.000

REV	DESCRIPTION	DATE
1.1	FINAL DESIGN REV. 1	02-25-2026

IOWA DEPARTMENT OF AGRICULTURE AND LAND STEWARDSHIP

IDALS PROJ. NO. CLA953734C

PLAN & PROFILE - DIVERSION BERMS

SHEET D.05

©Bolton & Menk, Inc. 2025, All Rights Reserved
h:\IDALS\25x140338000\CAD\C3D\140338003.dwg 8/1/2026 9:09:52 AM

SEED EMBANKMENT STRUCTURE SEEDING

SEED WAVE BERM TO 1 FT BELOW NORMAL POOL STRUCTURE SEEDING

SEED DISTURBED AREAS TO 1 FT BELOW NORMAL POOL STRUCTURE SEEDING

SEED BUFFER AREA TO EASEMENT BOUNDARY BUFFER SEEDING

SEED OUTLET CHANNEL STRUCTURE SEEDING

DO NOT SEED RIP RAP AREAS

DO NOT SEED POOL OR DIVERSION BERMS

SEED DISTURBED AREAS TO 1 FT BELOW NORMAL POOL STRUCTURE SEEDING

SEED COVER BERM EXTENTS STRUCTURE SEEDING

SEED AUXILIARY SPILLWAY AND SURROUNDING AREA STRUCTURE SEEDING

SEED BUFFER AREA TO EASEMENT BOUNDARY BUFFER SEEDING

SEED DISTURBED AREAS TO 1 FT BELOW NORMAL POOL STRUCTURE SEEDING

SEEDING AREAS	
BUFFER SEEDING	13.1 AC
STRUCTURE SEEDING	2.1 AC

LEGEND

- NORMAL POOL (1360.00)
- DEEP WATER AREA (<1357.00)
- 100-YEAR HWL (1363.49)
- PROPOSED EASEMENT BOUNDARY
- RIP-RAP
- EXCAVATE TO 1359.00
- FILL TO 1357.50
- STRUCTURE SEEDING
- BUFFER SEEDING

HORZ. SCALE 0 50 100 FEET

BOLTON & MENK
1519 BALTIMORE DRIVE
AMES, IA 50010
Phone: (515) 233-6100
Email: Ames@bolton-menk.com
www.bolton-menk.com

DESIGNED	BCS
DRAWN	NVD
CHECKED	JPR
CLIENT PROJ. NO.	25X.140338.000

REV	DESCRIPTION	DATE
1.1	FINAL DESIGN REV. 1	02-25-2026

IOWA DEPARTMENT OF AGRICULTURE AND LAND STEWARDSHIP

IDALS PROJ. NO. CLA953734C

SEEDING OVERVIEW

SHEET K.01

©Bolton & Menk, Inc. 2025, All Rights Reserved
h:\IDALS\25x140338000\CAD\C3D\140338K01.dwg 6/1/2026 9:10:06 AM

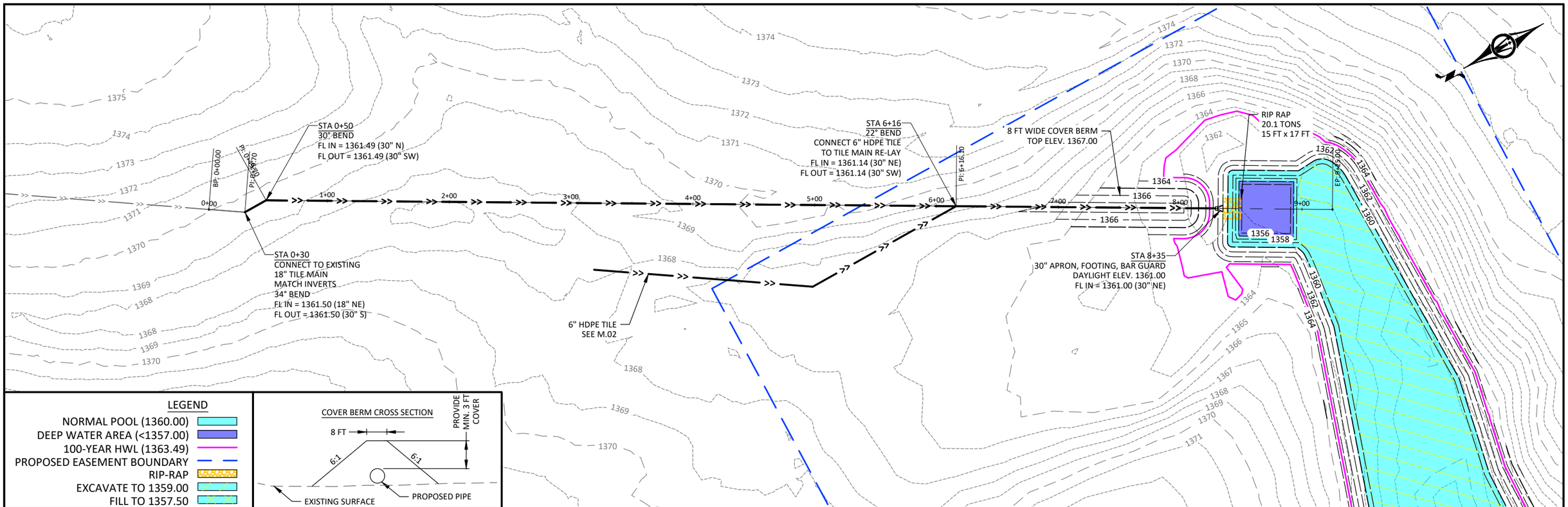

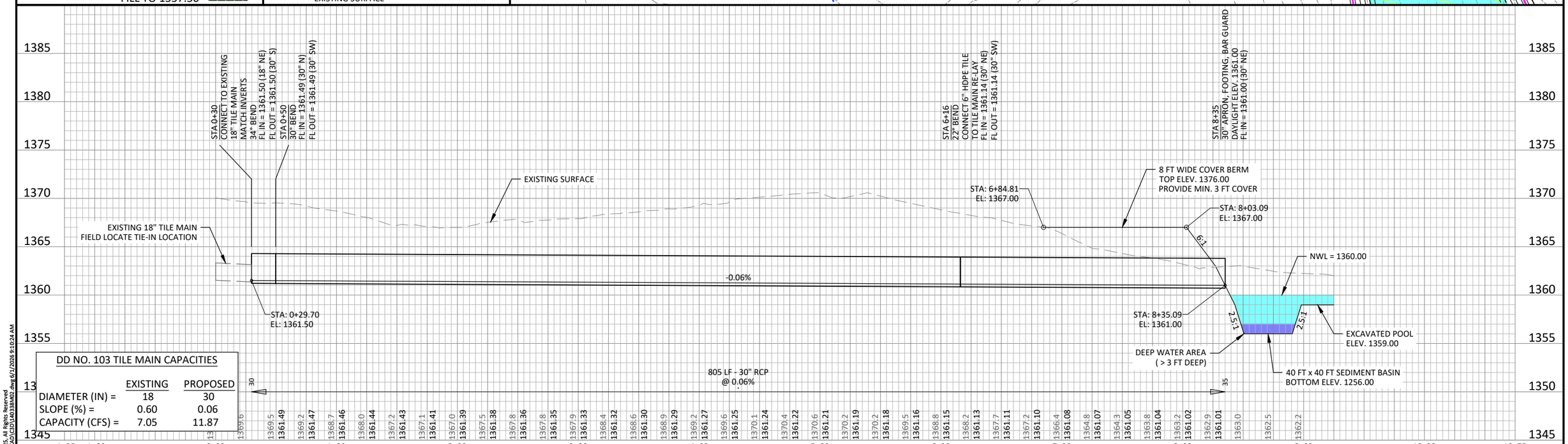

DD NO. 103 TILE MAIN CAPACITIES

	EXISTING	PROPOSED
DIAMETER (IN) =	18	30
SLOPE (%) =	0.60	0.06
CAPACITY (CFS) =	7.05	11.87

HORZ. 0 40 80 SCALE FEET

VERT. 0 5 10 SCALE FEET

BOLTON & MENK

1519 BALTIMORE DRIVE
AMES, IA 50010
Phone: (515) 233-6100
Email: Ames@bolton-menk.com
www.bolton-menk.com

DESIGNED	BCS
DRAWN	NVD
CHECKED	JPR
CLIENT PROJ. NO.	25X.140338.000

REV	DESCRIPTION	DATE
1.1	FINAL DESIGN REV. 1	02-25-2026

IOWA DEPARTMENT OF AGRICULTURE AND LAND STEWARDSHIP

IDALS PROJ. NO. CLA953734C

PLAN & PROFILE - TILE MAIN RE-LAY

SHEET M.01

©Bolton & Menk, Inc. 2025, All Rights Reserved
h:\DALS\25x140338000\CAD\C3D\140338M02.dwg 6/1/2026 9:10:24 AM

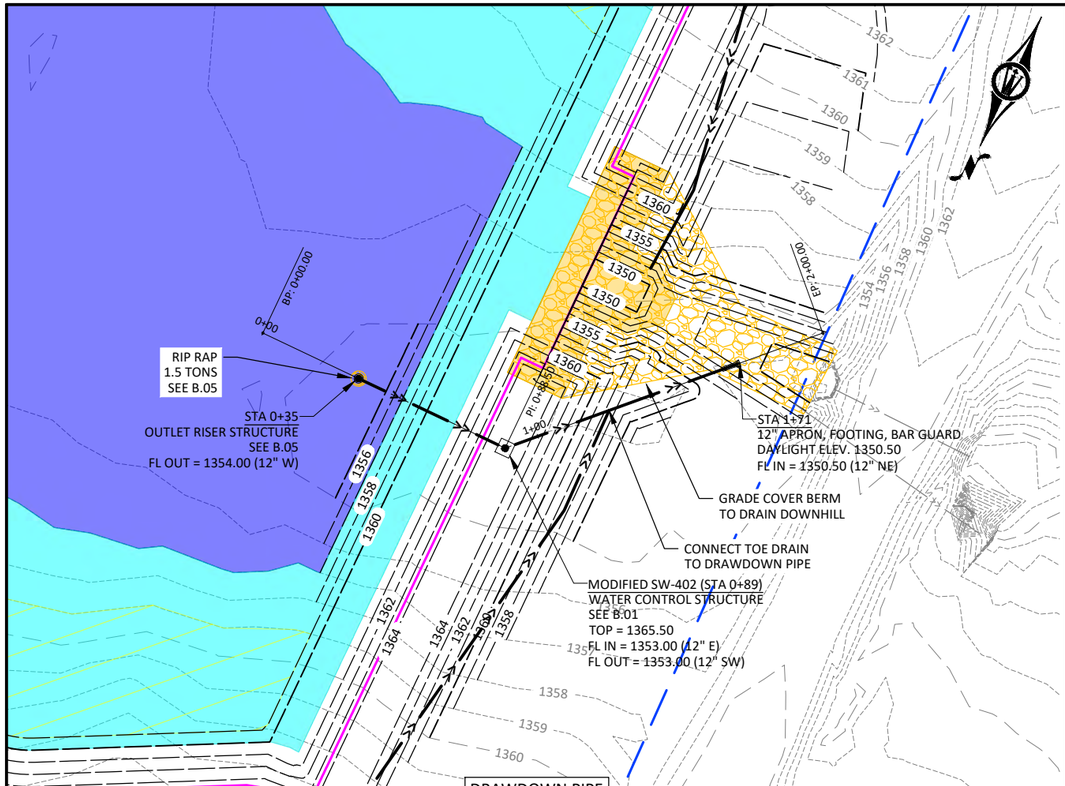

DRAWDOWN PIPE

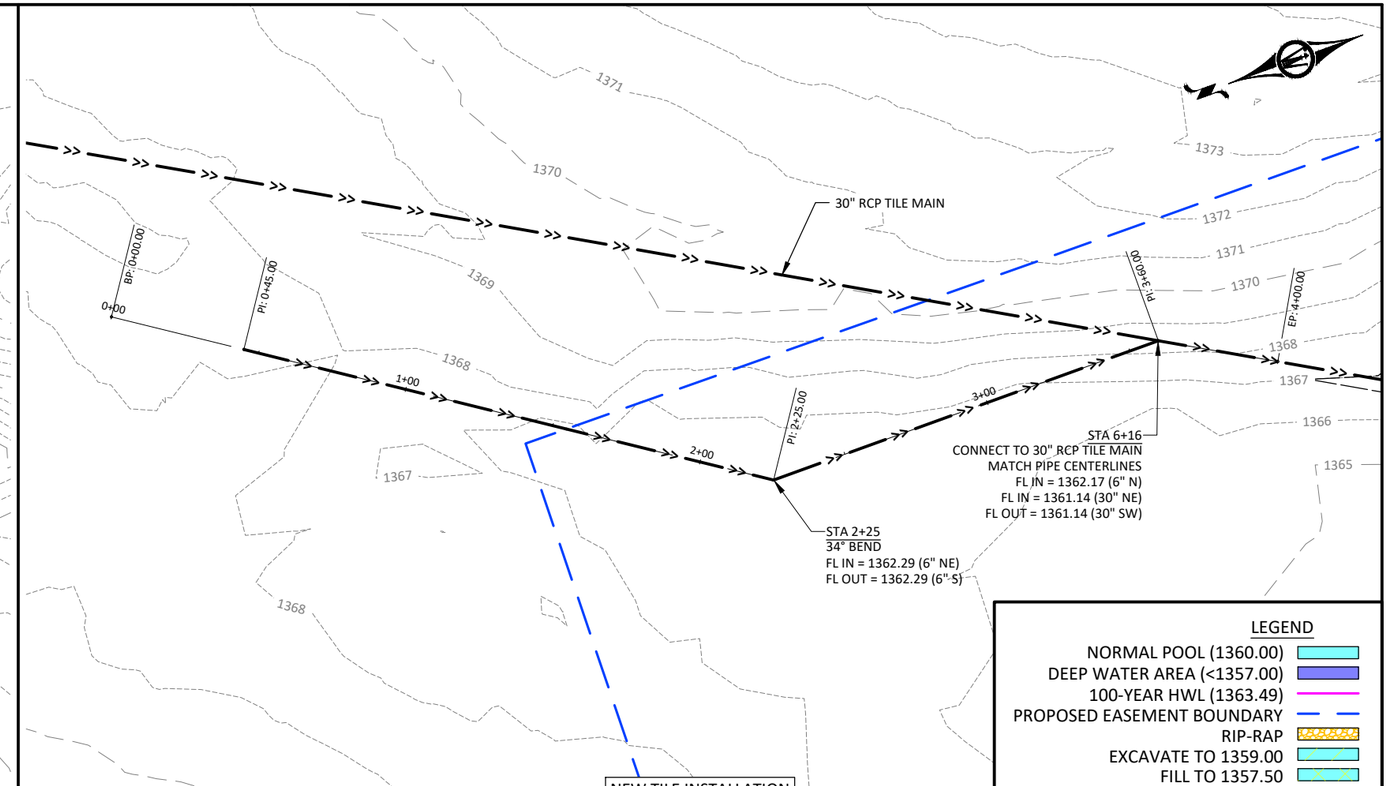

NEW TILE INSTALLATION

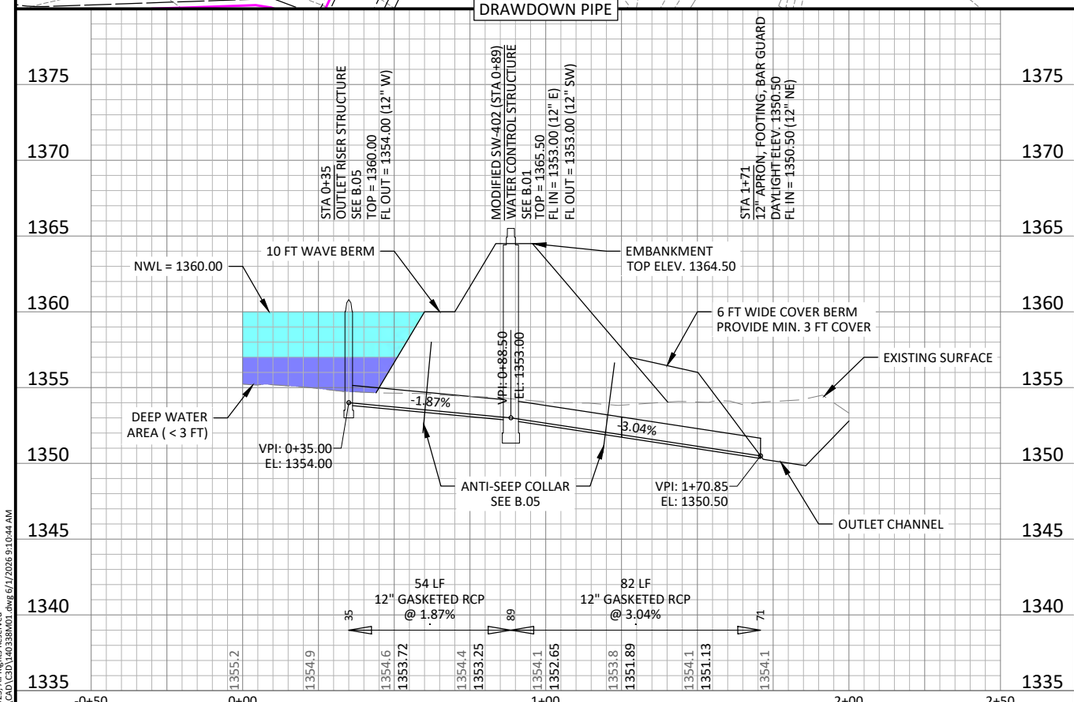

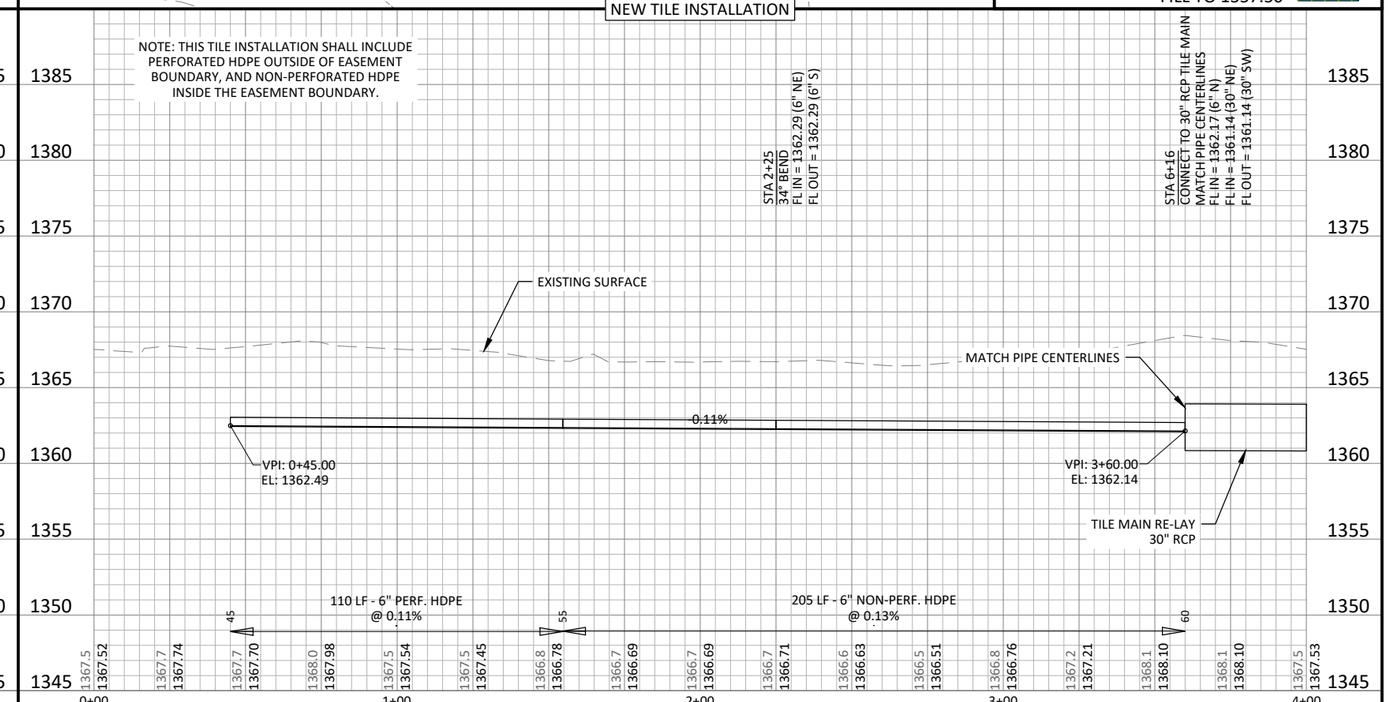

HORZ. 0 25 50 SCALE FEET

VERT. 0 5 10 SCALE FEET

BOLTON & MENK

1519 BALTIMORE DRIVE
AMES, IA 50010
Phone: (515) 233-6100
Email: Ames@bolton-menk.com
www.bolton-menk.com

DESIGNED	REV	DESCRIPTION	DATE
BCS	1.1	FINAL DESIGN REV. 1	02-25-2026
DRAWN NVD			
CHECKED JPR			
CLIENT PROJ. NO. 25X.140338.000			

IOWA DEPARTMENT OF AGRICULTURE AND LAND STEWARDSHIP

IDALS PROJ. NO. CLA953734C

PLAN & PROFILE - DRAWDOWN PIPE & NEW TILE INSTALLATION

SHEET M.02

©Bolton & Menk, Inc. 2025, All Rights Reserved
h:\IDALS\25x140338000\CAD\C3D\140338M01.dwg 6/1/2026 9:10:44 AM

APPENDIX I

CONSTRUCTION & ADMINISTRATION FORMS

September 25, 2026

Contractor name and address

Delivery via email: Contractor Email

RE: **NOTICE-OF-AWARD –** Cla953734C Nutrient Reduction Wetland Project, Contract 26-11

Dear _____,

This is to notify you that the Division of Soil Conservation and Water Quality has determined _____ is the successful bidder for the Cla953734C Nutrient Reduction Wetland Project. Award is being made for the base bid of $_____.

In accordance with Item #9 of the Instructions to Bidders, Document BB, you have fourteen (14) calendar days from the date of receipt of this notice to obtain the Performance Bond (*Document NN*), submit your Construction Progress Schedule (*Document JJ*) for review, and execute the Contract (*Document DD*). In addition, the Division must be provided with a Certificate of Insurance pursuant to the General Conditions, Insurance and Related Provisions (*Document FF, Part 6-01*).

Please note that Iowa Code Section 91C.7, requires that all construction contractors awarded a contract to perform work for the state or an agency of the state must be registered with the Iowa Department of Inspections, Appeals & Licensing. The Division of Soil Conservation and Water Quality cannot execute a contract with your firm unless you provide proof of this registration. Be sure to fill in the Department of Inspections, Appeals & Licensing registration number blank on the Contract (*Document DD*).

Enclosed are the Contract (*Document DD*), Construction Progress Schedule form (*Document JJ*), and the Performance Bond (*Document NN*). Please complete, sign and return scanned electronic copies along with completed Performance Bond. In addition, we must have the Certificate of Insurance pursuant to the General Conditions and/or Special Conditions.

Congratulations on being the successful bidder. We look forward to working with your company on this project. If you have any questions, please contact Tracy Blocker, (515) 344-6279.

Sincerely,

Jake Hansen, Chief
Water Resources Bureau
Division of Soil Conservation and Water Quality

JH/tab
Enclosures
CC:

September 25, 2026

Contractor name and address

Delivery via email: Contractor Email

RE: **NOTICE-TO-PROCEED –** Cla953734C Nutrient Reduction Wetland Project, Contract 26-11

Dear_____,

The Division of Soil Conservation and Water Quality received the signed construction Contract (*Document DD*), the completed Performance Bond (*Document NN*), and the Certificate of Insurance from your company. These documents were found to be in order and the Division executed this contract with _____ dated xx/xx/xxxx. A scanned copy of the executed Contract and Performance Bond are enclosed.

The Division has accepted the Construction Progress Schedule (*Document JJ*) included here, with a Construction Start Date of xx/xx/xxxx. A Preconstruction Conference, as required in Item 13 of the Instructions to Bidders (*Document BB*), must be held within seven (7) days prior to the Construction Start Date established in the Construction Progress Schedule, or earlier if mutually agreed. No work may commence on site prior to the Preconstruction Conference. If the Construction Start Date requires adjustment, that needs to be communicated to the Engineer and Division in a timely manner so as to facilitate scheduling of the Preconstruction Conference.

In accordance with the Contract _____ must commence work under this contract for the Cla953734C Nutrient Reduction Wetland Project on or before the Construction Start Date scheduled in the Construction Progress Schedule, but not before the Preconstruction Conference. You have until November 15, 2027 to complete all of the work except for seeding, and until 12/15/2027 to complete buffer seeding and 12/15/2027 to complete the structure seeding and within the respective seeding period indicated in the specifications.

Also attached is a scanned copy of the Iowa Construction Sales Tax Exempt Certificate and Authorization Letter for this project. Pursuant to Iowa Code Section 423.2(80), this allows you to purchase materials tax free for use on this project. Please read the information provided in the authorization letter. You are authorized with this Notice-to-Proceed to purchase necessary materials for this project and request reimbursement for those items that are stored prior to the Construction Start Date.

If you have any questions, please contact Tracy Blocker, (515) 344-6279.

Sincerely,

Jake Hansen, Chief
Water Resources Bureau
Division of Soil Conservation and Water Quality

JH/tab
Attachments
CC:

STATE OF IOWA
DIVISION OF SOIL CONSERVATION AND WATER QUALITY
CONSTRUCTION PROGRESS SCHEDULE

Project ID: Cla953734C _____ Date: _____

Contractor: _____
Name Phone

Contract End Dates:

All Construction Work Except Seeding: November 15, 2027
Seeding: Buffer December 15, 2027 Seeding: Structure December 15, 2027
Seeding must be completed within the respective seeding period

Scheduled Dates:

Anticipated Construction Start Date: _____

Preconstruction Conference Date Range*: _____
**Preconstruction Conference must be held prior to Construction Start Date, by no more than seven (7) days*

Estimated Completion Date of All Work Except Seeding: _____
Final Walkthrough should be held prior to Contract End Date for all construction work except seeding

Major Construction Work Item(s)	Order of Work	Estimated Duration of Work (days / weeks)
(Items to be established/grouped by Division on an individual project basis)		
Site Preparation		
Drain Tile Investigation		
Dam construction		
Earthwork		
Topsoil Placement		
Water Control Structure and Outlet Installation		
Sheet Pile Installation		
New Tile Installation		
Riprap Placement		
Grouting		
Seeding		

Dates established in this schedule may be adjusted as described in Document FF, Paragraph 3-21.

FOR THE CONTRACTOR

_____
(Company Representative)

_____
(Date)

_____
(Name of Company)

_____
(Address of Company)

_____
(City, State, Zip code

FOR THE DIVISION

_____
Mike Bourland, Water Resources Bureau
Division of Soil Conservation and Water Quality

_____
(Date)

Accepted ☐

Adjustment Requested ☐

If adjustment is requested, describe below:

END OF DOCUMENT JJ

APPLICATION AND CERTIFICATE FOR PAYMENT

DOCUMENT SS

PAGE 1 OF 2

TO DIVISION:

Iowa Division of Soil Conservation and Water Quality
1305 East Walnut Street
Des Moines, IA 50319-0050

FROM CONTRACTOR:

Contractor Name

Contractor Address

ENGINEER:

Engineer Name

Engineer Address

PROJECT:

Bid No.

Project ID

Date:

Period To:

DISTRIBUTION TO:
DIVISION
CONTRACTOR
ENGINEER

Summary of Approved Change Orders & Contract Amendments

Number	Addition	Deduction

		PAYMENT #1 -Ret	PAYMENT #2 -Ret	PAYMENT #3 -Ret	PAYMENT #4 -Ret	PAYMENT #5 -Ret	PAYMENT #6 - Ret	RETAINAGE ONLY
Net change by Change Orders and Contract Amendments	$ -	DATE	DATE	DATE	DATE	DATE	DATE	DATE
1. ORIGINAL CONTRACT SUM:		$ -						
2. Net Changes by Change Orders/Amendments		$ -						
(from table)								
3. Contract Sum to Date		$ -						
(Line 1+/-2)								
4. Total Completed & Stored to Date		$ -						
(Column G on Continuation Sheet)								
5. Retainage		$ -						
(3% of Line 4)								
6. Total Earned Less Retainage		$ -						
(Line 4 less Line 5)								
7. Previous Certificates For Payment		$ -						
(Line 6 from prior Certificate)								
8. Balance to Finish, Plus Retainage		$ -						
(Line 3 less Line 6)								
9. Current Payment Due		$ -						
(Line 6 less Line 7)								

The undersigned Contractor certifies that to the best of Contractor's knowledge, information, and belief, the Work covered by this Application for Payment has been completed in accordance with the Contract Documents, that all amounts have been paid to Contractor for which previous Certificates for Payment were issued and payments received from the Division and that current payment shown herein is now

By:_____ Date _____
CONTRACTOR

In accordance with the Contact Documents, based on on-site observations and the data comprising this application, Engineer certifies to the Division that to the best of the Engineer's knowledge, information, and belief, the Work has progressed as indicated, the quality of the Work is in accordance with the Contract Documents, and Contractor is entitled to payment of the AMOUNT CERTIFIED.

By:_____ Date_____
ENGINEER'S CERTIFICATE FOR PAYMENT

AMOUNT CERTIFIED $_____

This Certificate is not negotiable. The AMOUNT CERTIFIED is payable only to the Contractor named herein. Issuance, payment, and acceptance of payment are without prejudice to any rights of Contracting Officer or Contractor under this Contract.

CONTINUATION SHEET FOR APPLICATION AND CERTIFICATE FOR PAYMENT **DOCUMENT SS**

A	B	C	D	E	F	G	H	I
Item No.	Description of Work	Scheduled Value	Work From Previous Application (D+E)	Completed This Period	Materials Presently Stored Not in D or E	Total Completed & Stored (D+E+F)	% Complete (G/C)	Balance to Finish (C-G)
1	Bid Item 1	$ -	$ -	$ -		$ -	0%	$ -
2	Bid Item 2	$ -	$ -	$ -		$ -	0%	$ -
3	Bid Item 3	$ -	$ -	$ -		$ -	0%	$ -
4	Bid Item 4	$ -	$ -	$ -		$ -	0%	$ -
5	Bid Item 5	$ -	$ -	$ -		$ -	0%	$ -
6	Bid Item 6	$ -	$ -	$ -		$ -	0%	$ -
7	Bid Item 7	$ -	$ -	$ -		$ -	0%	$ -
8	Bid Item 8	$ -	$ -	$ -		$ -	0%	$ -
9	Bid Item 9	$ -	$ -	$ -		$ -	0%	$ -
10	Bid Item 10	$ -	$ -	$ -		$ -	0%	$ -
11	Bid Item 11	$ -	$ -	$ -		$ -	0%	$ -
12	Bid Item 12	$ -	$ -	$ -		$ -	0%	$ -
13	Bid Item 13	$ -	$ -	$ -		$ -	0%	$ -
14	Bid Item 14	$ -	$ -	$ -		$ -	0%	$ -
15	Bid Item 15	$ -	$ -	$ -		$ -	0%	$ -
16	Bid Item 16	$ -	$ -	$ -		$ -	0%	$ -
17	Bid Item 17	$ -	$ -	$ -		$ -	0%	$ -
18	Bid Item 18	$ -	$ -	$ -		$ -	0%	$ -
19	Bid Item 19	$ -	$ -	$ -		$ -	0%	$ -
	TOTALS FOR PAYMENT #1	$ -	$ -	$ -		$ -	0%	$ -

Current Payment Due	**$ -**

STATE OF IOWA
DIVISION OF SOIL CONSERVATION AND WATER QUALITY
CHANGE ORDER REQUEST

Change Order Request No. _____

Project ID: Cla953734C Date: _____

Name of Project: Cla953734C

Location of Project: Clay County

Name of Contractor: _____

Architect/Engineer: Bolton & Menk, Brandon Short P.E.

Contract Plan and Detail Reference: _____

Change Order Request Drawing No. and Date: _____

Contract Specification Reference: _____

Description of Change: _____

BREAKDOWN OF CHANGE ORDER COST BY BID ITEM:

Item #	Description	Adjustment Quantity	Unit Cost	Total Cost Adjustment
			$	$
			TOTAL	**$**

BREAKDOWN OF CONTRACT COST:

Original Project Contract Amount:				$ 0.00
Approved Contract Amendments No.	____	through	____	$ 0.00
Pending Recommended Change Order Requests	____	through	____	$ 0.00
Approved Change Order Requests No.	____	through	____	$ 0.00
This Amendment Request:				$ 0.00
Resulting Total Recommended Amount:				**$ 0.00**

Reason for Contract Change: _____

Change Requested by: _____

_____ (Signature)

_____ (Date)

CONTRACTOR APPROVAL

_____ (Company)

By:_____ (Signature)

_____ (Address)

_____ (Date)

_____

_____

IDALS PROJECT REPRESENTATIVE RECOMMENDATIONS

_____ Concur _____ Recommend Rejection (Attach Explanation)

IDALS Project Representative:_____ (Signature) _____ (Date)

DIVISION OF SOIL CONSERVATION AND WATER QUALITY AUTHORIZATION

Change Order required due to:

_____

_____

Immediate authorization to proceed granted: _____ Yes _____ No

APPROVED:

_____
Susan Kozak, Director
Division of Soil Conservation and Water Quality
Iowa Department of Agriculture
and Land Stewardship

_____
(Date)

DENIED:

_____
Susan Kozak, Director
Division of Soil Conservation and Water Quality
Iowa Department of Agriculture
and Land Stewardship

_____
(Date)

END OF DOCUMENT HH

State of Iowa
Iowa Department of Agriculture and Land Stewardship
DIVISION OF SOIL CONSERVATION AND WATER QUALITY
Cla953734C Nutrient Reduction Wetland Project Construction Contract Amendment

THIS AMENDMENT, made this _____ day of _____, 20_____, by and between the State of Iowa, acting through:

Iowa Department of Agriculture and Land Stewardship
Division of Soil Conservation and Water Quality

hereinafter called the ***DIVISION***, and

_____
(Name of Company)

_____
(Address)

_____
(City, State, Zip)

hereinafter called the ***CONTRACTOR***.

WITNESSETH: That the ***DIVISION*** and the ***CONTRACTOR*** mutually agree to amend the agreement made the _____day of _____, 20_____, for the Clay County Nutrient Reduction Wetland Project (Cla953734C – Bid No. 26-11) in this Amendment Number _____ as described below:

Description of Amendment:
_____
_____
_____

Contract Plan Sheet(s) and Detail Reference(s): _____
Amendment No._____ Drawing No. and Date: _____
Contract Specification Reference(s): _____

Reason for Revision of Contract Completion Date(s):_____
_____
_____

Original Contract Completion Date for All Work Except Seeding:	November 15, 2027
Current Completion Date for All Work Except Seeding:	
Revised Completion Date for All Work Except Seeding, This Amendment:	

Original Contract Completion Date for Seeding-Buffer	December 15, 2027
Current Completion Date for Seeding-Buffer	
Revised Completion Date for Seeding-Buffer, This Amendment:	

Original Contract Completion Date for Seeding-Structure	December 15, 2027
Current Completion Date for Seeding-Structure	
Revised Completion Date for Seeding-Structure, This Amendment:	

BREAKDOWN OF AMENDMENT CONTRACT COST BY BID ITEM:

Item #	Description	Adjustment Quantity	Unit Cost	Total Cost Adjustment
			$	$
			TOTAL	**$**

BREAKDOWN OF CONTRACT COST:

Original Project Contract Amount:				$ 0.00
Approved Contract Amendments No.	____	through	____	$ 0.00
Pending Recommended Change Order Requests	____	through	____	$ 0.00
Approved Change Order Requests No.	____	through	____	$ 0.00
This Amendment Request:				$ 0.00
Resulting Total Recommended Amount:				**$ 0.00**

IN WITNESS WHEREOF, the parties hereto have executed this Amendment, in the day and year first above mentioned.

FOR THE DIVISION

Grant D. Menke, Deputy Secretary
Iowa Department of Agriculture and Land Stewardship

(Date)

FOR THE CONTRACTOR

(Company Representative)

(Date)

(Name of Company)

(Address of Company)

(City, State, Zip Code)

Seal if by a corporation

CONSENT FROM SURETY

(Surety Representative)

(Name of Surety)

(Date)

END OF DOCUMENT II

IOWA
Department of Revenue
www.state.ia.us/tax

Designated Exempt Entity
Iowa Construction Sales Tax Exemption Certificate

This document may be completed by a designated exempt entity and given to their contractor and/or subcontractor along with an authorization letter. *Seller:* Keep this certificate in your files. *Contractor/Exempt Entity:* Keep a copy of this certificate for your records. **Do not send this to the Department of Revenue**

Designated Exempt Entity		
Division of Soil Conservation and Water Quality Iowa Department of Agriculture and Land Stewardship		
Address 1 **1305 East Walnut Street**		
Address 2		
City **Des Moines**	State **IA**	Zip Code **50319**
Construction Project Name **Cla953734C Nutrient Reduction Wetland Project**		
Construction Project Number (if used) **Job No. 26-11**		

General Contractor or Subcontractor Name		
Sample		
Address 1 **123 Construction Ave**		
Address 2		
City **Dig City**	State **IA**	Zip Code **55555**

Description of contract/subcontract (please print/type clearly)

Construction of Nutrient Reduction Wetland.

The named contractor may purchase building materials used in the contract, exempt from sales tax. This exemption does NOT apply to materials, equipment and supplies consumed by the contractor or subcontractor.

Designated Exempt Entity Authorized Agent ._____ Date: _____

Authorization Letter From Division of Soil Conservation and Water Quality - Agriculture and Land Stewardship

Pursuant to Iowa Code Sections: 422.42 (16) & (17), and 422.47 (5), you are authorized to purchase construction materials tax free for the contract specified above.

The exemption certificate (or a copy of the certificate) may be provided to the suppliers of your construction materials and will authorize them to sell you the materials exempt from Iowa sales tax and any applicable local option sales tax and school infrastructure local option sales tax. Complete information on qualifying materials can be found at www.state.ia.us/tax, the Department of Revenue (IDR) website.

It is your responsibility to have records identifying the materials purchased and verifying they were used on this contract. Any materials purchased tax-free and not used on the construction project are subject to sales and applicable local option taxes. Should this occur, the tax must be paid directly by you to IDR in the same calendar quarter the project is completed. E-mail the department at: idrf@idrf.state.ia.us if you have questions on this requirement.

Contractors should be aware that use of the certificate to claim exemption from tax for items not used on this project or that do not qualify for exemption could result in civil or criminal penalties.

31-013 (12/10/02)

SAMPLE

END OF DOCUMENT QQ

APPENDIX II
ADDENDA & BID TAB

[Page intentionally left blank to serve as a placeholder for any addenda and for the Bid Tab which will be included after the bidding process]