PLANS

LOCATION MAP
NOT TO SCALE

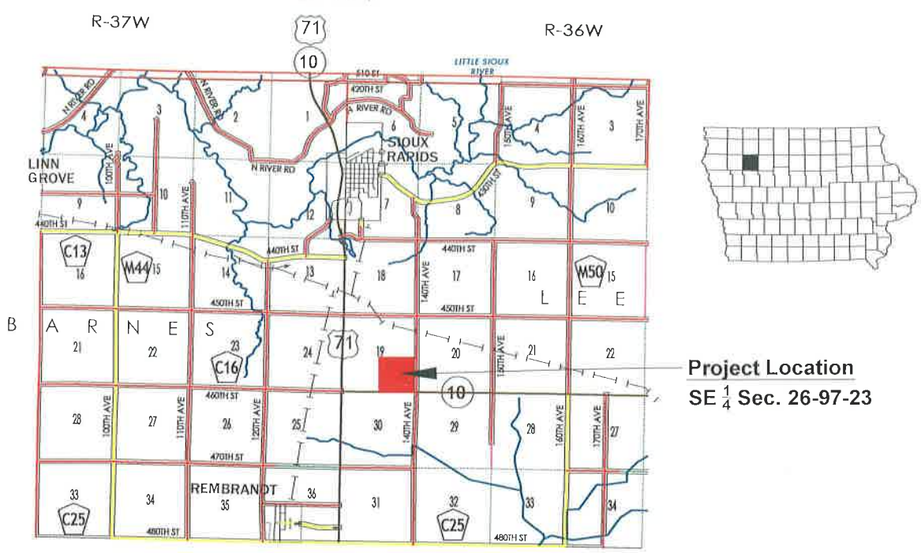

CREP WETLAND PROJECT:
BV 933619D

BUENA VISTA COUNTY, IOWA

VICINITY MAP - *NOT TO SCALE*

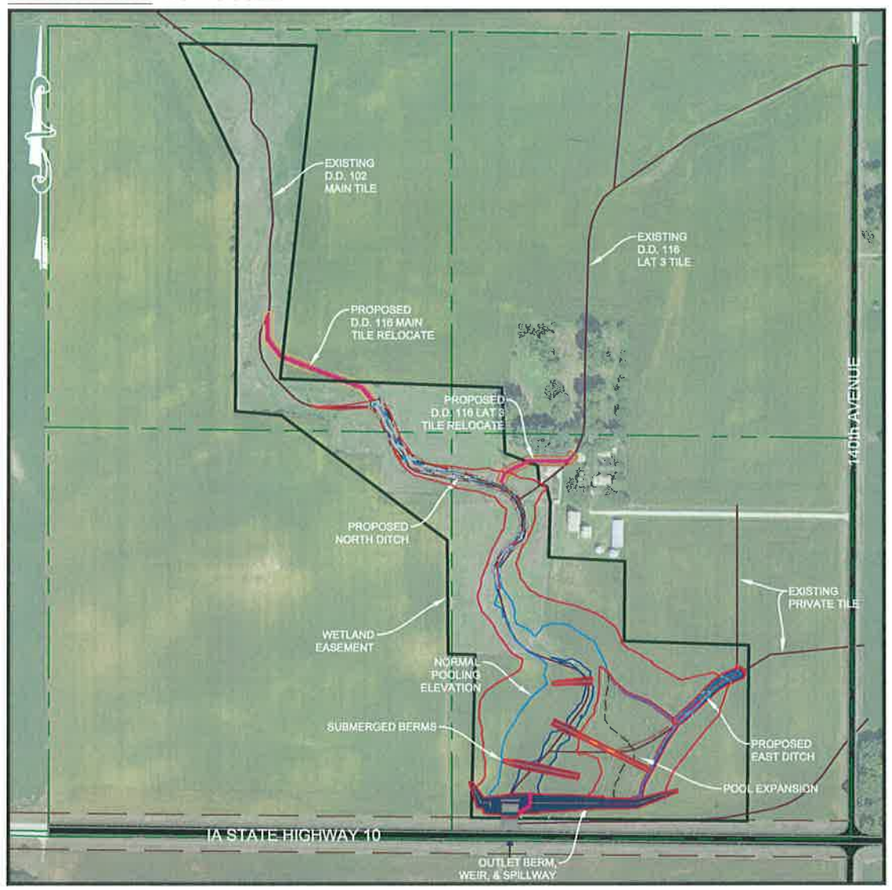

INDEX OF SHEETS

SHEET A.01 - TITLE
SHEET A.02 - SITE PLAN
SHEET D.01 - CROSS SECTION A-A
SHEET D.02 - CROSS SECTION B-B
SHEET D.03 - CONTROL STRC CROSS SECTION
SHEET D.04 - CORE TENCH CROSS SECTION
SHEET D.05 - POOL EXPANSION PLAN
SHEET D.06 - EAST DITCH PLAN & PROFILE
SHEET D.07 - NORTH DITCH PLAN & PROFILE
SHEET D.08 - D.D. 102 & D.D. 116 TILE PLAN & PROFILE
SHEET U.01 - WEIR & SPILLWAY DETAILS
SHEET U.02 - CONTROL STRUCTURE DETAILS

IOWA ONE CALL
1-800-292-8989
www.iowaonecall.com
811 Know what's below. Call before you dig.

LICENSED PROFESSIONAL ENGINEER
DALLAS L. HEIKENS
17550
IOWA

I hereby certify that this engineering document was prepared by me or under my direct personal supervision and that I am a duly licensed Professional Engineer under the laws of the State of Iowa.

Dallas L. Heikens Date 2/11/21

Dallas L. Heikens, P.E.
License number 17550
My license renewal date is December 31, 2022
Pages or sheets covered by this seal:
Sheets A.01, A.02, D.01 - D.08, U.01, U.02

JACOBSON-WESTERGARD & ASSOCIATES, INC.
105 S. SIXTH ST. ESTHERVILLE, IOWA
PHONE: (712) 362-2647 Toll Free (866) 215-2298
E-MAIL: jwa@jacobson-westergard.com
Web Site: www.jacobson-westergard.com
CONSULTING ENGINEERS LAND SURVEYING

REVISIONS	BY	DATE

CREP Wetland Project
BV 933619D
Buena Vista County, Iowa

TITLE

Date 1/31/21
Designer DLH
Draftsman DDB
Checker DLH

Project Number
E18141
Sheet
A.01

CIVIL 3D: PROJECTS\2018\E18141\E18141 - SITE

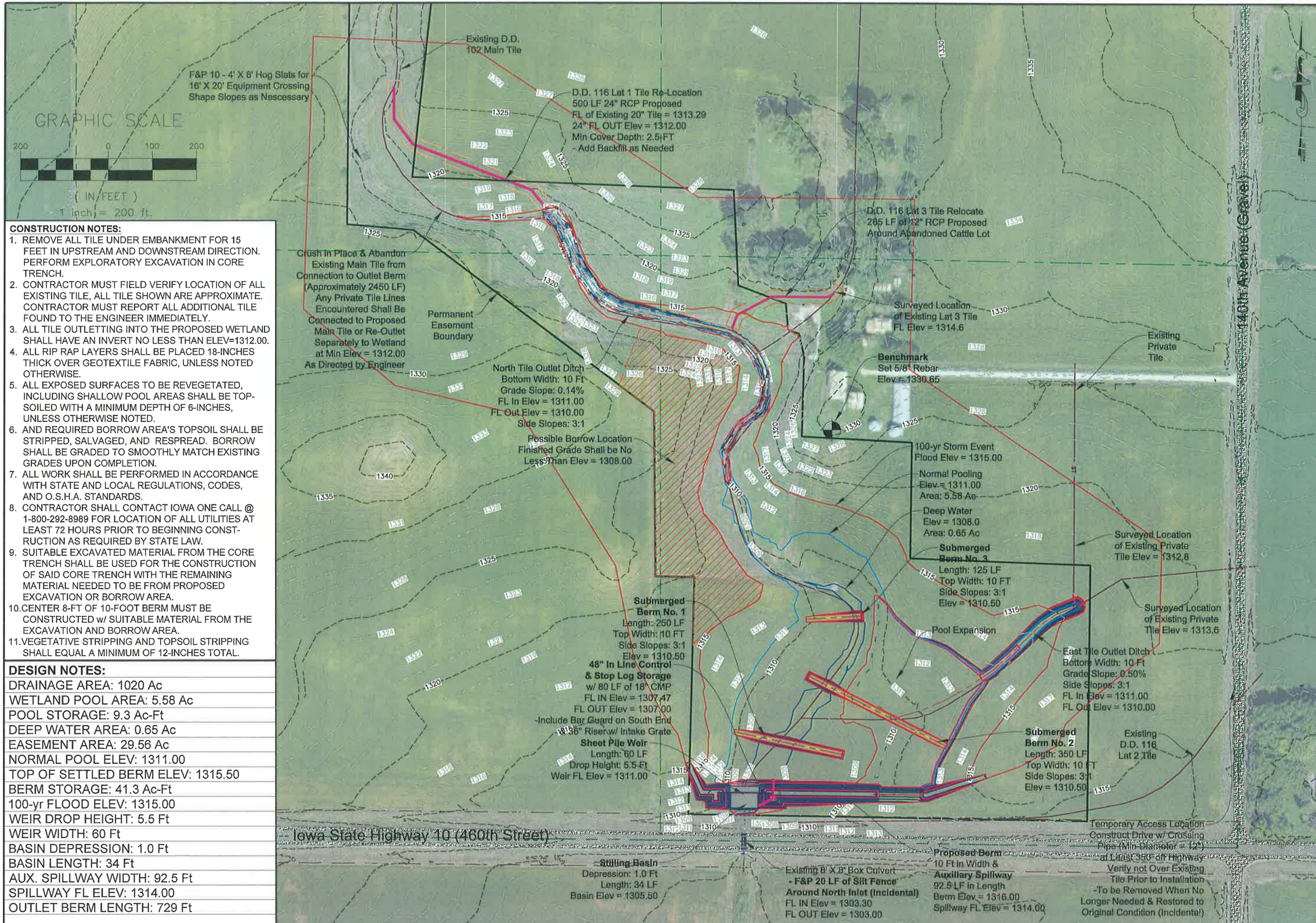

CONSTRUCTION NOTES:

1. REMOVE ALL TILE UNDER EMBANKMENT FOR 15 FEET IN UPSTREAM AND DOWNSTREAM DIRECTION. PERFORM EXPLORATORY EXCAVATION IN CORE TRENCH.
2. CONTRACTOR MUST FIELD VERIFY LOCATION OF ALL EXISTING TILE, ALL TILE SHOWN ARE APPROXIMATE. CONTRACTOR MUST REPORT ALL ADDITIONAL TILE FOUND TO THE ENGINEER IMMEDIATELY.
3. ALL TILE OUTLETTING INTO THE PROPOSED WETLAND SHALL HAVE AN INVERT NO LESS THAN ELEV=1312.00.
4. ALL RIP RAP LAYERS SHALL BE PLACED 18-INCHES THICK OVER GEOTEXTILE FABRIC, UNLESS NOTED OTHERWISE.
5. ALL EXPOSED SURFACES TO BE REVEGETATED, INCLUDING SHALLOW POOL AREAS SHALL BE TOP-SOILED WITH A MINIMUM DEPTH OF 6-INCHES, UNLESS OTHERWISE NOTED.
6. AND REQUIRED BORROW AREA'S TOPSOIL SHALL BE STRIPPED, SALVAGED, AND RESPREAD. BORROW SHALL BE GRADED TO SMOOTHLY MATCH EXISTING GRADES UPON COMPLETION.
7. ALL WORK SHALL BE PERFORMED IN ACCORDANCE WITH STATE AND LOCAL REGULATIONS, CODES, AND O.S.H.A. STANDARDS.
8. CONTRACTOR SHALL CONTACT IOWA ONE CALL @ 1-800-292-8989 FOR LOCATION OF ALL UTILITIES AT LEAST 72 HOURS PRIOR TO BEGINNING CONSTRUCTION AS REQUIRED BY STATE LAW.
9. SUITABLE EXCAVATED MATERIAL FROM THE CORE TRENCH SHALL BE USED FOR THE CONSTRUCTION OF SAID CORE TRENCH WITH THE REMAINING MATERIAL NEEDED TO BE FROM PROPOSED EXCAVATION OR BORROW AREA.
10. CENTER 8-FT OF 10-FOOT BERM MUST BE CONSTRUCTED w/ SUITABLE MATERIAL FROM THE EXCAVATION AND BORROW AREA.
11. VEGETATIVE STRIPPING AND TOPSOIL STRIPPING SHALL EQUAL A MINIMUM OF 12-INCHES TOTAL.

DESIGN NOTES:

DRAINAGE AREA: 1020 Ac
WETLAND POOL AREA: 5.58 Ac
POOL STORAGE: 9.3 Ac-Ft
DEEP WATER AREA: 0.65 Ac
EASEMENT AREA: 29.56 Ac
NORMAL POOL ELEV: 1311.00
TOP OF SETTLED BERM ELEV: 1315.50
BERM STORAGE: 41.3 Ac-Ft
100-yr FLOOD ELEV: 1315.00
WEIR DROP HEIGHT: 5.5 Ft
WEIR WIDTH: 60 Ft
BASIN DEPRESSION: 1.0 Ft
BASIN LENGTH: 34 Ft
AUX. SPILLWAY WIDTH: 92.5 Ft
SPILLWAY FL ELEV: 1314.00
OUTLET BERM LENGTH: 729 Ft

JACOBSON–WESTERGARD & ASSOCIATES, INC.
105 S. SIXTH ST. ESTHERVILLE, IOWA
PHONE: (712) 362-2647 Toll Free (866) 215-2298
E-MAIL: jwa@jacobson-westergard.com
Web Site: www.jacobson-westergard.com
CONSULTING ENGINEERS LAND SURVEYING

REVISIONS	BY	DATE

CREP Wetland Project
BV 933619D
Buena Vista County, Iowa

SITE PLAN

Date 1/31/21
Designer DLH
Draftsman DDB
Checker DLH

Project Number
E18141

Sheet
A.02

CIVIL 3D PROJECTS\2018\E18141\E18141 - SITE

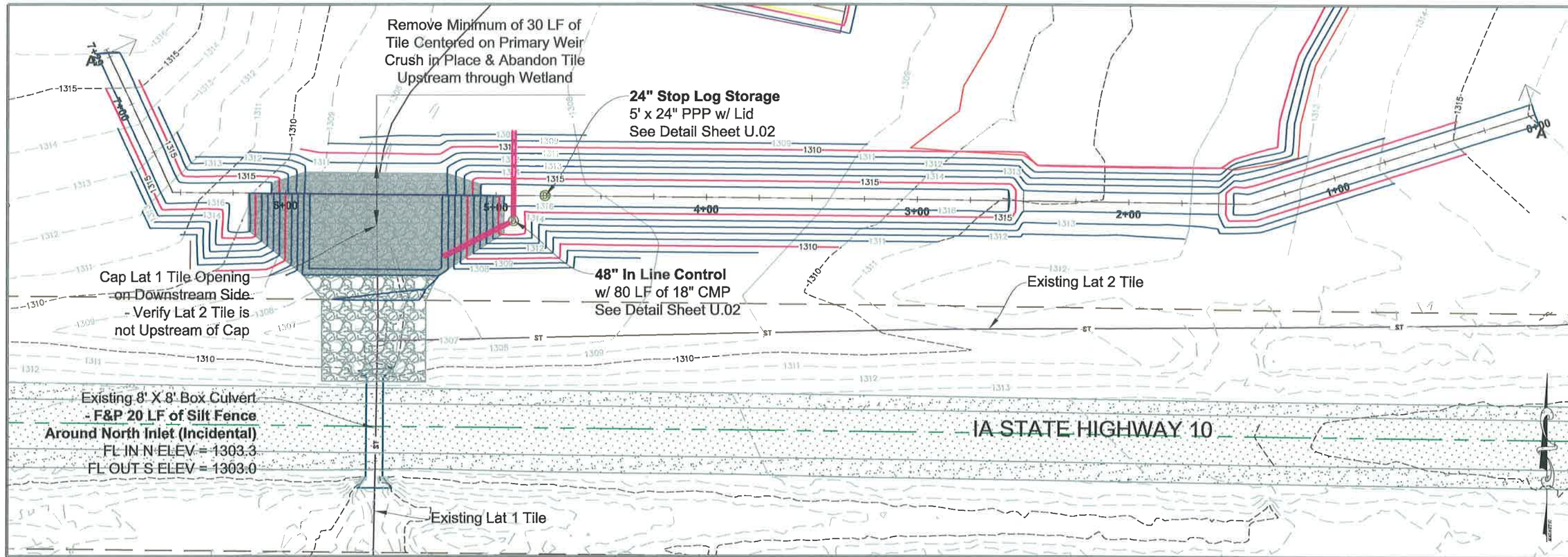

SHEET PILE DESIGN NOTES:
SHEET PILE AREA: 2271.00 SF
SHEET PILE MIN SZ: 14.5
MIN SECTION MODULUS: 13.0 IN^3/FT OF WALL
MINIMUM THICKNESS: 0.250 IN

MINIMUM STEEL GRADE: 36 KSI
-(MEET ASTM A-328, A-572, OR A-690 MATERIAL SPECIFICATION)
MINIMUM MOMENT OF INERTIA PER PILE: 136.9 IN^4

GRAPHIC SCALE
50 0 25 50
(IN FEET)
1 inch = 50 ft.

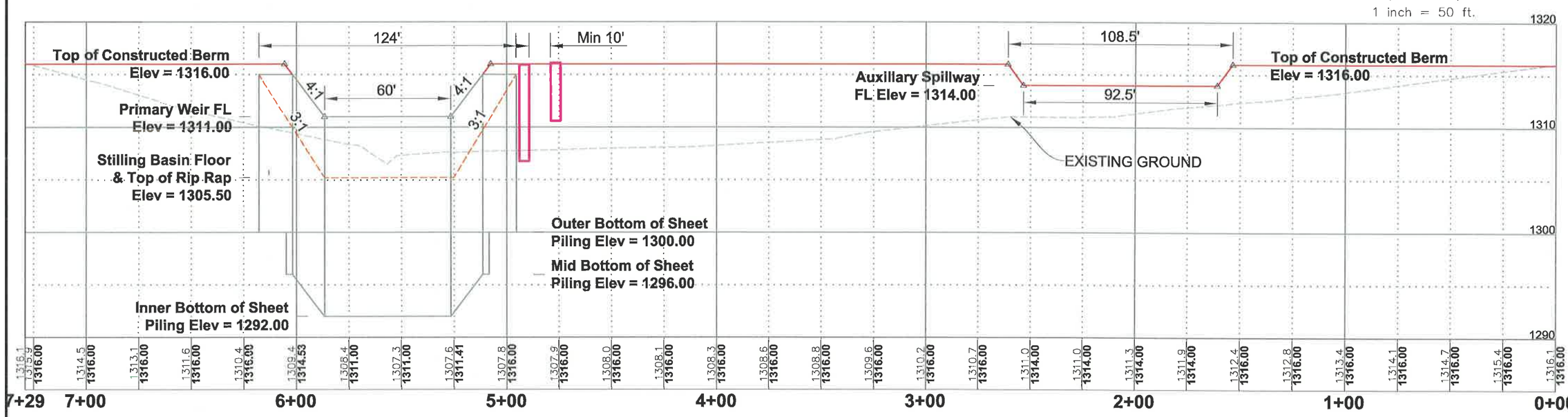

JACOBSON-WESTERGARD & ASSOCIATES, INC.
105 S. SIXTH ST. ESTHERVILLE, IOWA
PHONE: (712) 362-2647 Toll Free (866) 215-2298
E-MAIL: jwa@jacobson-westergard.com
Web Site: www.jacobson-westergard.com
CONSULTING ENGINEERS LAND SURVEYING

REVISIONS	BY	DATE

CREP Wetland Project
BV933619D
Buena Vista County, Iowa

CROSS SECTION A-A

Date 1/31/21
Designer DLH
Draftsman DDB
Checker DLH

Project Number
E18141
Sheet
D.01

CIVIL 3D PROJECTS\2018\E18141\E18141 - SITE

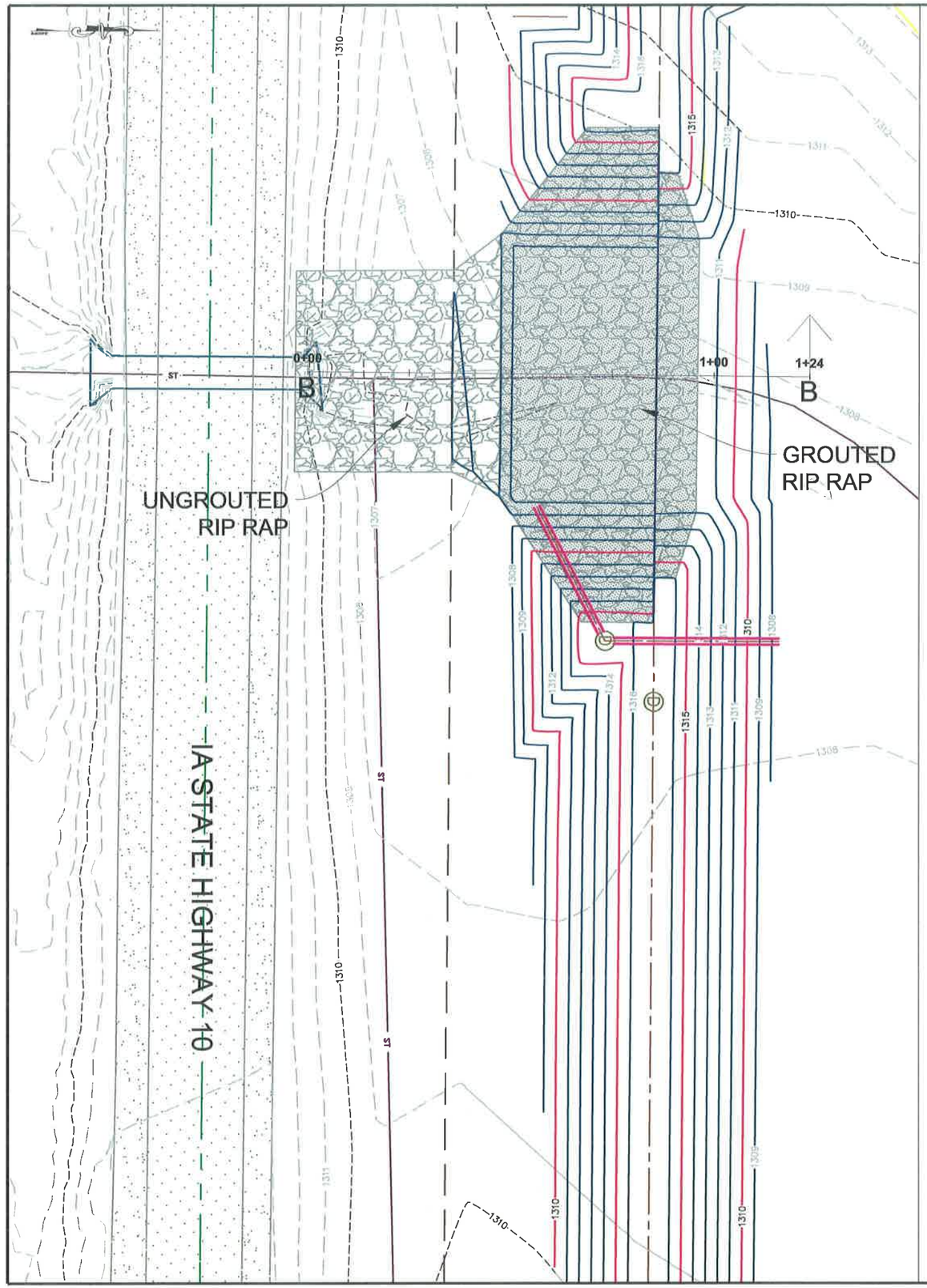

SECTION B-B

Note: Geotextile Fabric shall be placed under all Rip Rap

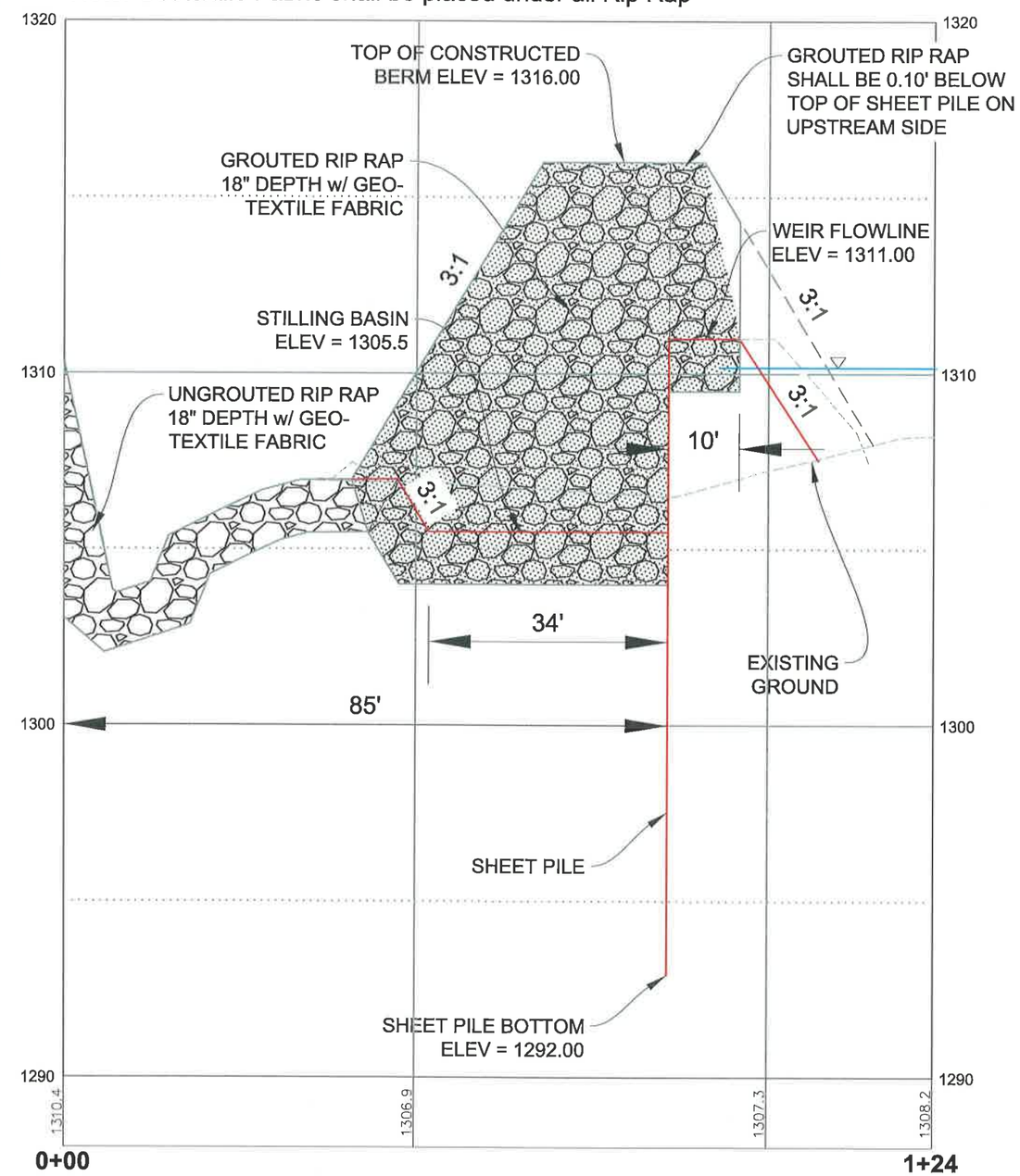

JACOBSON–WESTERGARD & ASSOCIATES, INC.
105 S. SIXTH ST. ESTHERVILLE, IOWA
PHONE: (712) 362-2647 Toll Free (866) 215-2298
E-MAIL: jwa@jacobson-westergard.com
Web Site: www.jacobson-westergard.com
CONSULTING ENGINEERS LAND SURVEYING

REVISIONS	BY	DATE

CREP Wetland Project
BV933619D
Buena Vista County, Iowa

CROSS SECTION B-B

Date 1/31/21
Designer DLH
Draftsman DDB
Checker DLH

Project Number
E18141
Sheet
D.02

CIVIL 3D PROJECTS\2018\E18141\E18141 – SITE

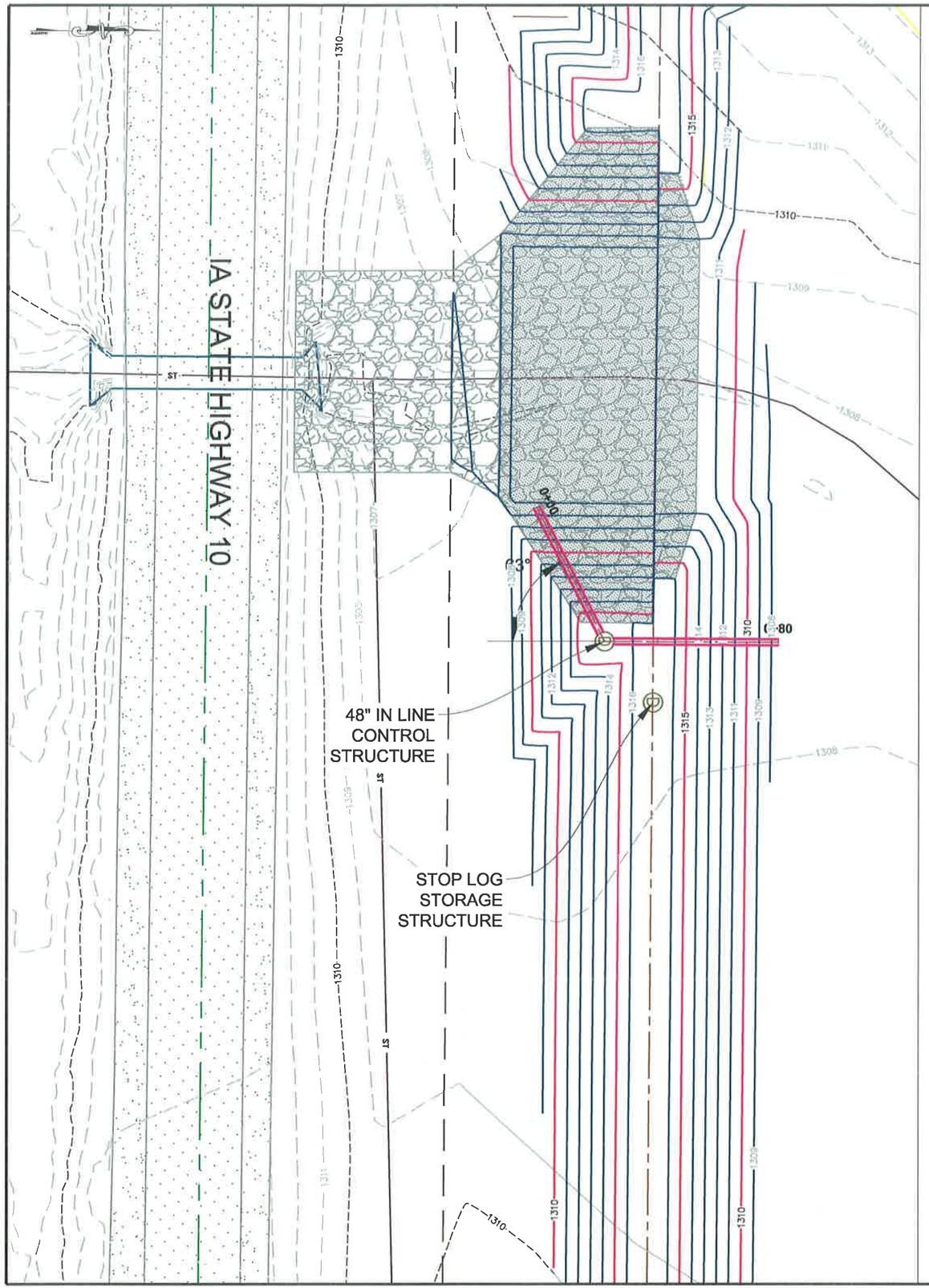

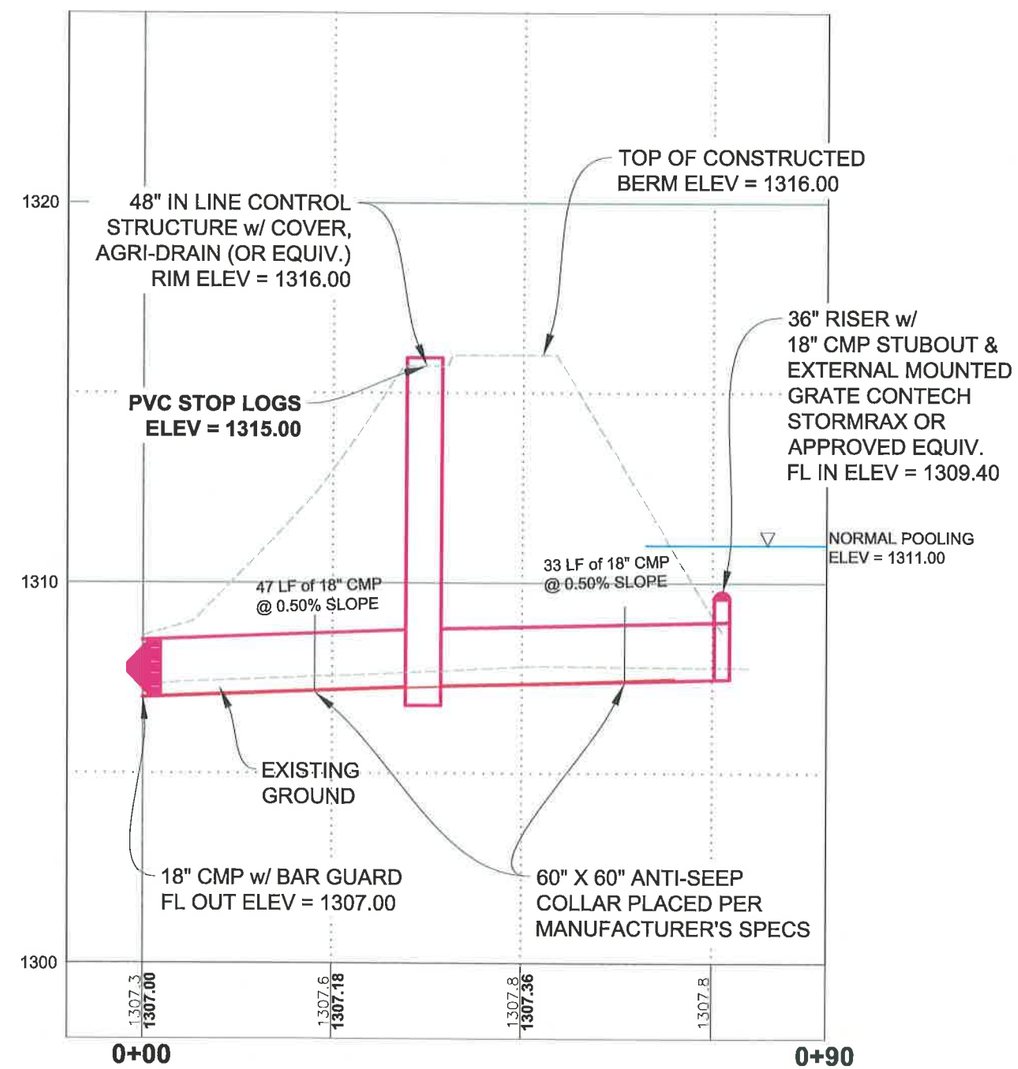

JACOBSON–WESTERGARD & ASSOCIATES, INC.
105 S. SIXTH ST. ESTHERVILLE, IOWA
PHONE: (712) 362-2847 Toll Free (866) 215-2298
E-MAIL: jwa@jacobson-westergard.com
Web Site: www.jacobson-westergard.com
CONSULTING ENGINEERS LAND SURVEYING

REVISIONS	BY	DATE

CREP Wetland Project
BV933619D
Buena Vista County, Iowa

CONTROL STRUCTURE
PLAN & PROFILE

Date 1/31/21
Designer DLH
Draftsman DDB
Checker DLH

Project Number
E18141

Sheet
D.03

CIVIL 3D PROJECTS:\2018\E18141\E18141 – SITE

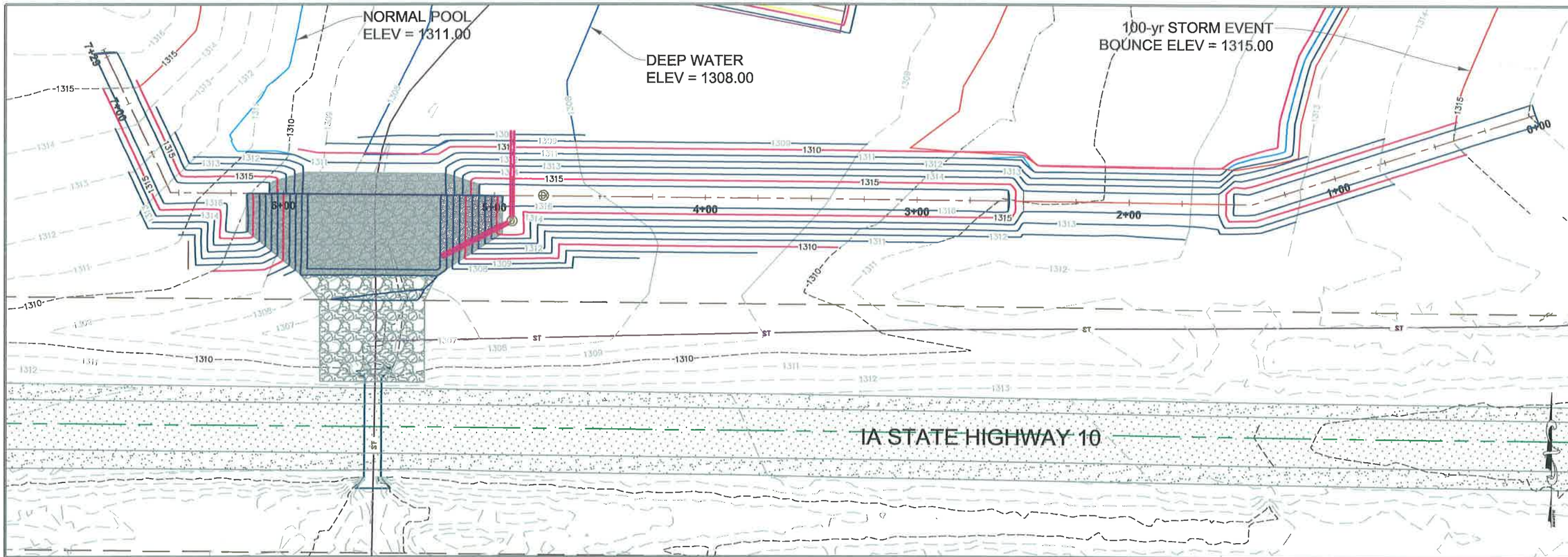

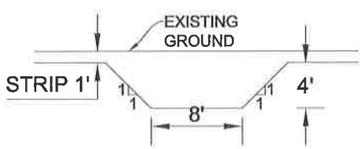

CORE TRENCH DETAIL

CORE TRENCH CONSTRUCTION NOTES:

1. STRIP 6-INCHES OF VEGETATION BENEATH PROPOSED EMBANKMENT.
2. STRIP 6-INCHES OF TOPSOIL BENEATH PROPOSED EMBANKMENT.
3. EXCAVATE 4-FOOT DEPTH, OR UNTIL SUITABLE MATERAIL IS REACHED.
4. EXCAVATE CORE TRENCH FROM STA 1+00 TO STA 6+50 OF PROPOSED BERM.
5. EXCAVATE CORE TRENCH ALONG APPROXIMATE CENTERLINE OF PROPOSED BERM FILL.
6. CORE TRENCH SIDE SLOPES SHALL NOT BE STEEPER THAN 1:1.
7. CORE TRENCH BACKFILL SHALL BE IMPERVIOUS MATERIAL.
8. REMOVE ALL TILE THROUGH PROPOSED BERM FOOTPRINT FOR 15-FEET UP- AND DOWNSTREAM. PERFORM EXPLORATORY DURING CORE TRENCH EXCAVATION.

GRAPHIC SCALE

50 0 25 50

(IN FEET)
1 inch = 50 ft.

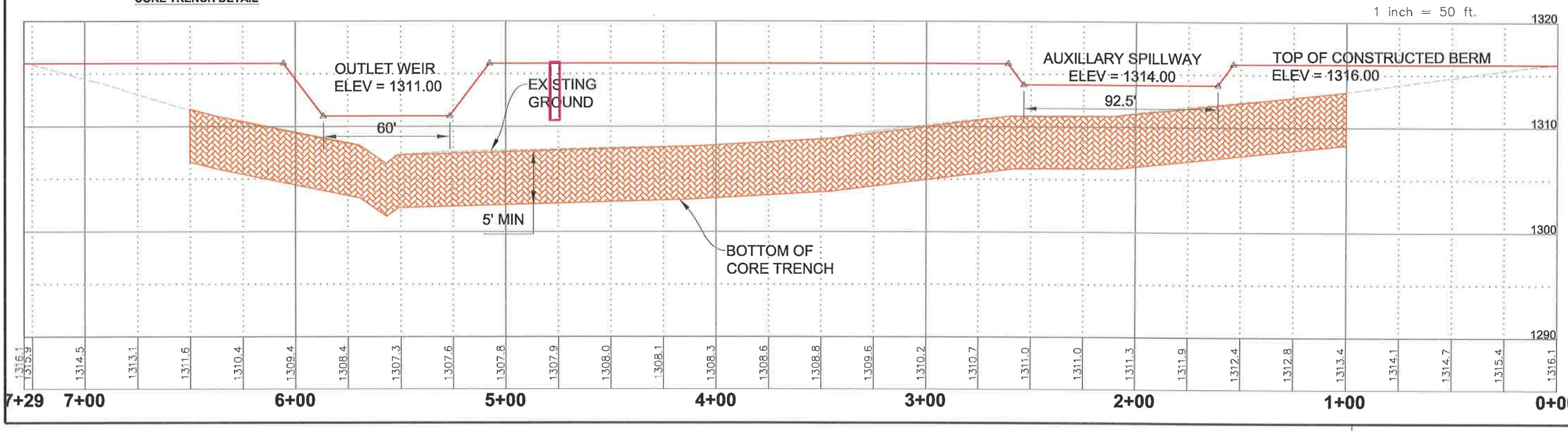

JACOBSON–WESTERGARD & ASSOCIATES, INC.
105 S. SIXTH ST. ESTHERVILLE, IOWA
PHONE: (712) 362-2647 Toll Free (866) 215-2298
E-MAIL: jwa@jacobson-westergard.com
Web Site: www.jacobson-westergard.com
CONSULTING ENGINEERS LAND SURVEYING

REVISIONS	BY	DATE

CREP Wetland Project
BV933619D
Buena Vista County, Iowa

CROSS SECTION A-A

Date 1/31/21
Designer DLH
Draftsman DDB
Checker DLH

Project Number
E18141

Sheet
D.04

CIVIL 3D PROJECTS\2018\E18141\E18141 – SITE

100-yr STORM EVENT
FLOOD ELEV = 1315.00

Submerged Berm No. 3
Length: 125 LF
Top Width: 10 FT
Side Slopes: 3:1
Elev = 1310.50

NORMAL POOL
ELEV = 1311.00

DEEP WATER
ELEV = 1308.00

Submerged Berm No. 1
Length: 250 LF
Top Width: 10 FT
Side Slopes: 3:1
Elev = 1310.50

Submerged Berm No. 2
Length: 350 LF
Top Width: 10 FT
Side Slopes: 3:1
Elev = 1310.50

POOL EXPANSION
81,100 SF EXCAVATED TO **ELEV = 1309.50** AND SLOPED TO MATCH AT EXTERIOR EDGE. SLOPE NOT TO EXCEED **3:1**. SPREAD MINIMUM OF 6-INCHES OF TOPSOIL AT DESIGN GRADE.

GRAPHIC SCALE
60 0 30 60
(IN FEET)
1 inch = 60 ft.

IA STATE HIGHWAY 10

JACOBSON–WESTERGARD & ASSOCIATES, INC.
CONSULTING ENGINEERS LAND SURVEYING
105 S. SIXTH ST. ESTHERVILLE, IOWA
PHONE: (712) 362-2847 Toll Free (866) 215-2298
E-MAIL: jwa@jacobson-westergard.com
Web Site: www.jacobson-westergard.com

REVISIONS	BY	DATE

CREP Wetland Project
BV 933619D
Buena Vista County, Iowa

POOL EXPANSION PLAN

Date 1/31/21
Designer DLH
Draftsman DDB
Checker DLH

Project Number
E18141
Sheet
D.05

CIVL 3D PROJECTS\2018\E18141\E18141 – SITE

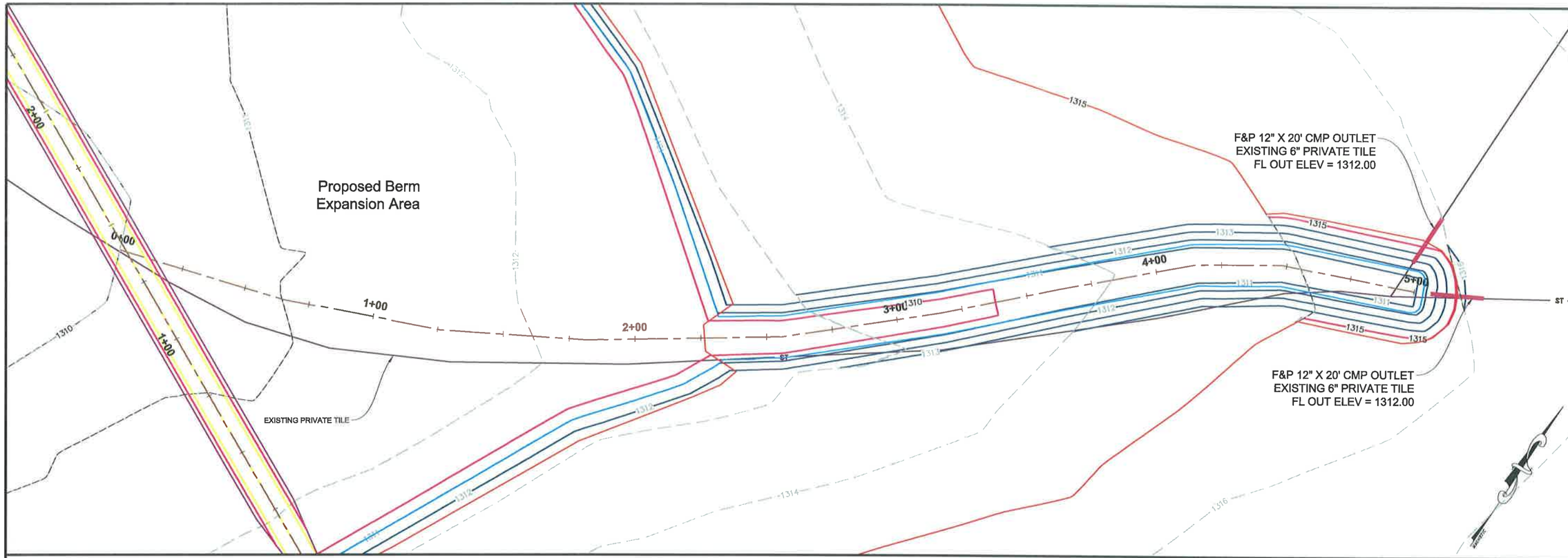

TYPICAL CROSS SECTION

NOT TO SCALE

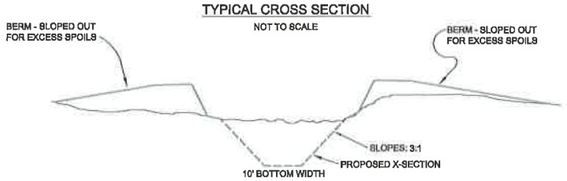

DITCH EXCAVATION NOTES:

1. THE CONTRACTOR IS RESPONSIBLE FOR MAKING ALL "ONE-CALL" REQUIREMENTS.
2. FURNISH AND PLACEMENT OF OUTLET FOR ALL EXISTING PRIVATE TILE INTO DITCH WILL BE REQUIRED.
3. TOPSOIL SHALL BE STRIPPED AND RESPREAD OVER EXCAVATED DITCH FOR A MINIMUM DEPTH OF 6-INCHES, TO DESIGN GRADE OF THE PROPOSED SURFACE.
4. ALL LEVELED SPOILS WILL REQUIRE A MINIMUM OF SIX INCHES OF TOPSOIL SPREAD AT SURFACE.
5. ALL DITCH EXCAVATION MUST BE DONE IN A MANNER TO MINIMIZE EROSION OF THE PROPOSED DITCH.
6. DISSIMILAR TYPES OF PIPE SHALL BE CONNECTED WITH A DP COUPLER, PRODUCED BY MARMAC OR PRE-APPROVED EQUAL.

GRAPHIC SCALE

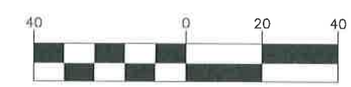

(IN FEET)
1 inch = 40 ft.

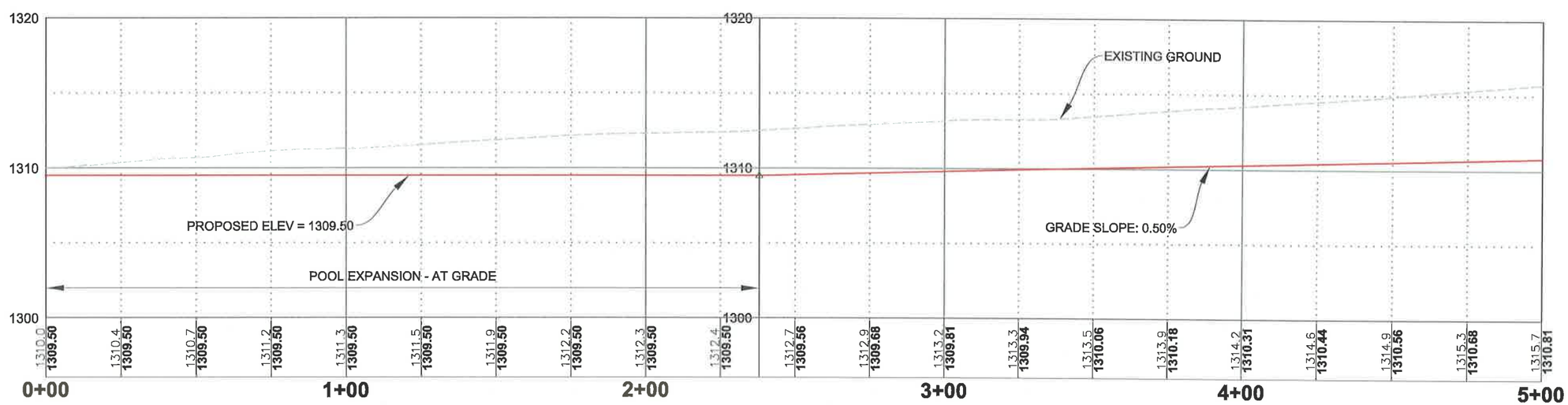

JACOBSON-WESTERGARD & ASSOCIATES, INC.
CONSULTING ENGINEERS LAND SURVEYING
105 S. SIXTH ST. ESTHERVILLE, IOWA
PHONE: (712) 362-2647 Toll Free (888) 215-2298
E-MAIL: jwa@jacobson-westergard.com
Web Site: www.jacobson-westergard.com

REVISIONS	BY	DATE

CREP Wetland Project
BV933619D
Buena Vista County, Iowa

EAST DITCH
PLAN & PROFILE

Date 1/31/21
Designer DLH
Draftsman DDB
Checker DLH

Project Number
E18141

Sheet
D.06

CIVIL 3D PROJECTS\2018\E18141\E18141 - SITE

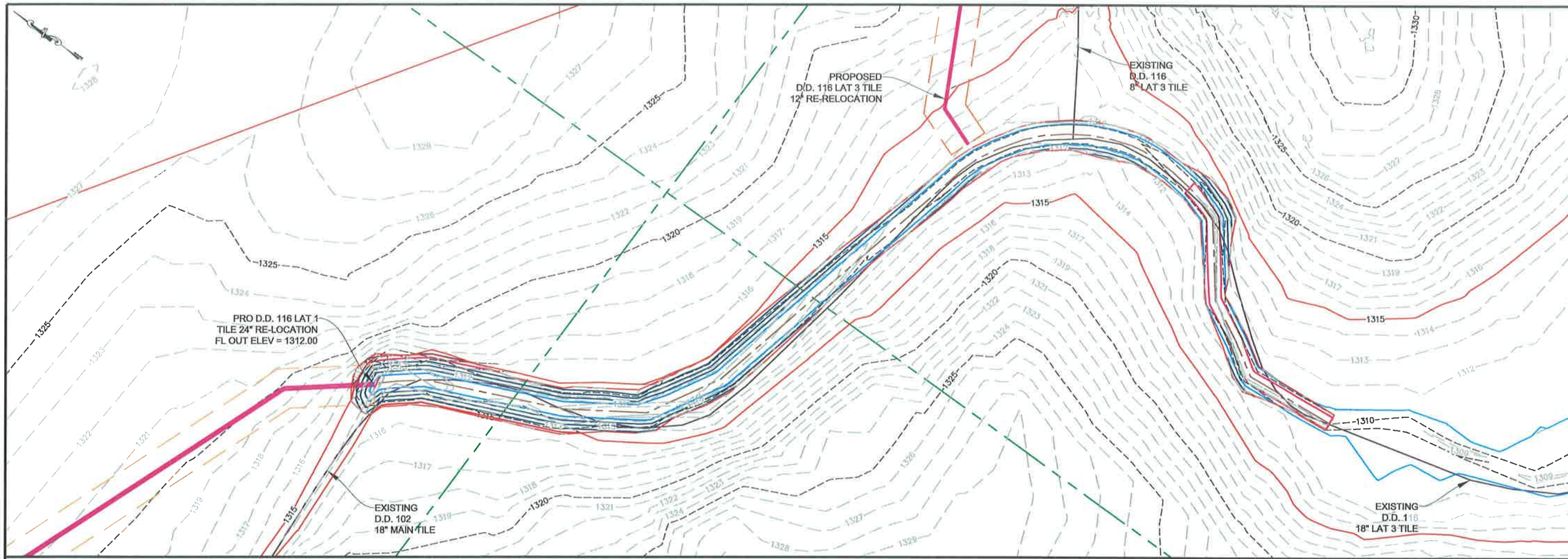

TYPICAL CROSS SECTION

NOT TO SCALE

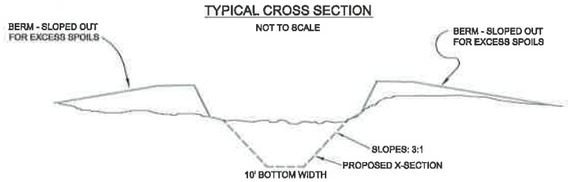

DITCH EXCAVATION NOTES:

1. THE CONTRACTOR IS RESPONSIBLE FOR MAKING ALL "ONE-CALL" REQUIREMENTS.
2. FURNISH AND PLACEMENT OF OUTLET FOR ALL EXISTING PRIVATE TILE INTO DITCH WILL BE REQUIRED.
3. TOPSOIL SHALL BE STRIPPED AND RESPREAD OVER EXCAVATED DITCH FOR A MINIMUM DEPTH OF 6-INCHES, TO DESIGN GRADE OF THE PROPOSED SURFACE.
4. ALL LEVELED SPOILS WILL REQUIRE A MINIMUM OF SIX INCHES OF TOPSOIL SPREAD AT SURFACE.
5. ALL DITCH EXCAVATION MUST BE DONE IN A MANNER TO MINIMIZE EROSION OF THE PROPOSED DITCH.
6. DISSIMILAR TYPES OF PIPE SHALL BE CONNECTED WITH A DP COUPLER, PRODUCED BY MARMAC OR PRE-APPROVED EQUAL.

GRAPHIC SCALE

(IN FEET)
1 inch = 80 ft.

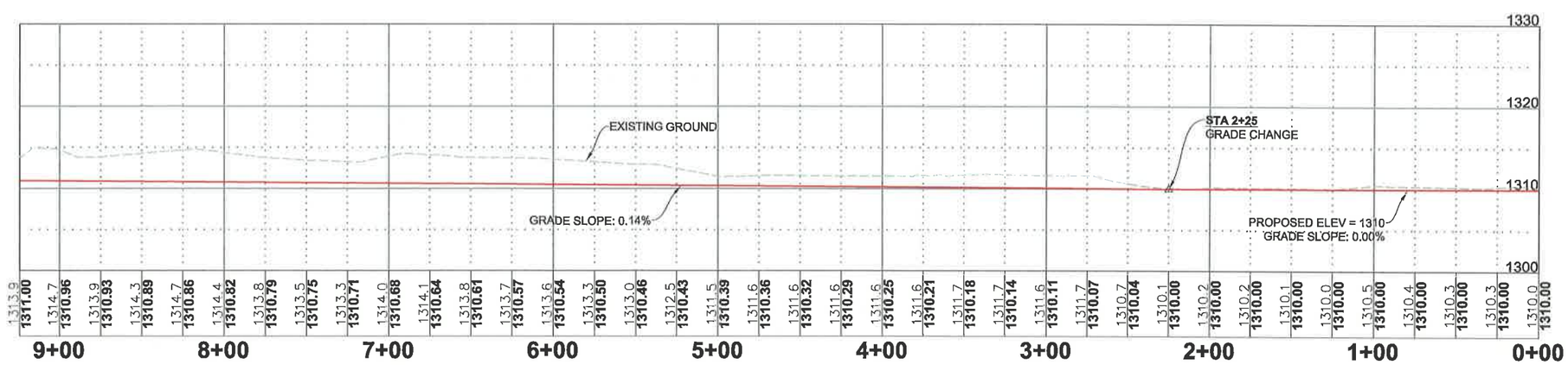

JACOBSON–WESTERGARD & ASSOCIATES, INC.
105 S. SIXTH ST. ESTHERVILLE, IOWA
PHONE: (712) 362-2847 Toll Free (866) 215-2298
E-MAIL: jwa@jacobson-westergard.com
Web Site: www.jacobson-westergard.com
CONSULTING ENGINEERS LAND SURVEYING

REVISIONS	BY	DATE

CREP Wetland Project
BV933619D
Buena Vista County, Iowa

NORTH DITCH
PLAN & PROFILE

Date 1/31/21
Designer DLH
Draftsman DDB
Checker DLH

Project Number
E18141
Sheet
D.07

CIVIL 3D PROJECTS\2018\E18141\E18141 – SITE

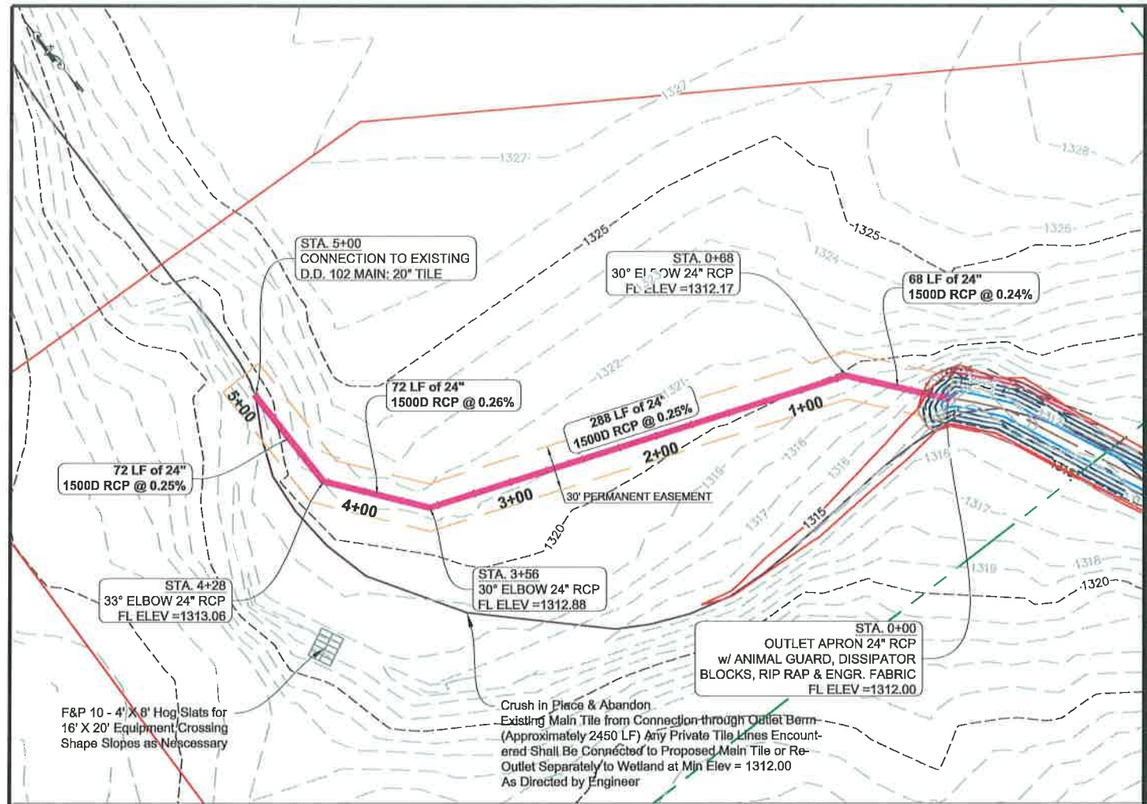

D.D. 116 LAT 1 TILE RE-LOCATION

Structure Table		
Name	Description	Details
STA 0+00	OUTLET APRON 24" RCP w/ ANIMAL GUARD, DISSIPATOR BLOCKS, RIP RAP & ENGR. FABRIC	24" FL IN = 1312.00
STA 0+68	30° ELBOW 24" RCP	24" FL IN = 1312.17 24" FL OUT = 1312.17
STA 3+56	30° ELBOW 24" RCP	24" FL IN = 1312.88 24" FL OUT = 1312.88
STA 4+28	33° ELBOW 24" RCP	24" FL IN = 1313.06 24" FL OUT = 1313.06

Pipe Table					
STA	Description	Length	Slope	FL OUT	FL IN
0+00 - 0+68	24" 1500D RCP	68	0.24%	1312.00	1312.17
0+68 - 3+56	24" 1500D RCP	288	0.25%	1312.17	1312.88
3+56 - 4+28	24" 1500D RCP	72	0.26%	1312.88	1313.06
4+28 - 5+00	24" 1500D RCP	72	0.25%	1313.06	1313.24

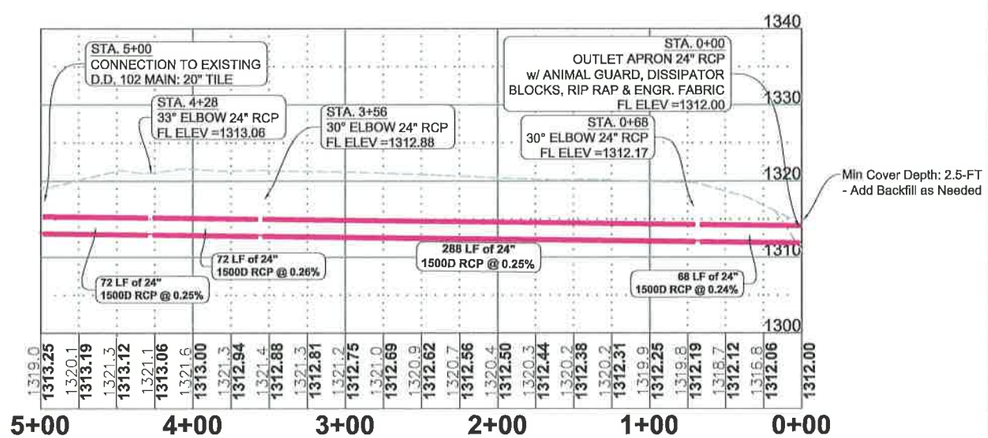

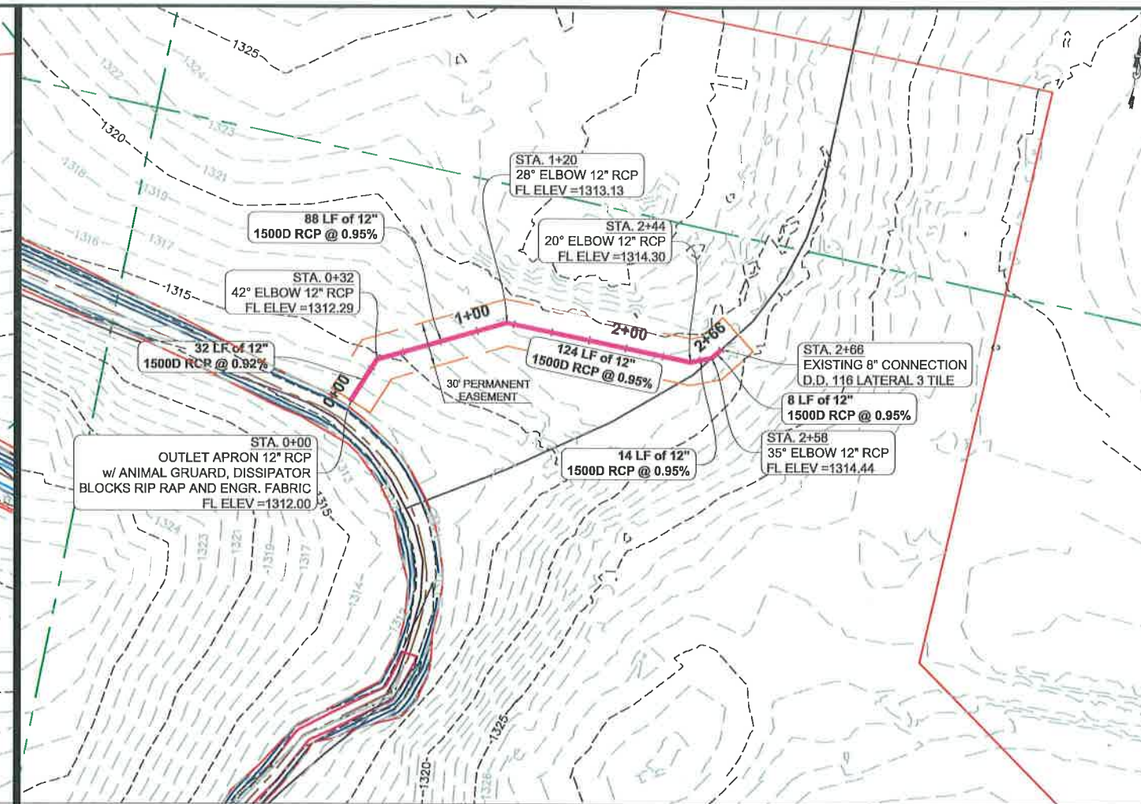

D.D. 116 LAT 3 TILE RE-OUTLET

Structure Table		
Name	Description	Details
STA 0+00	OUTLET APRON 12" RCP w/ ANIMAL GRUARD, DISSIPATOR BLOCKS RIP RAP AND ENGR. FABRIC	12" FL IN = 1312.00
STA 0+32	42° ELBOW 12" RCP	12" FL IN = 1312.29 12" FL OUT = 1312.29
STA 1+20	28° ELBOW 12" RCP	12" FL IN = 1313.13 12" FL OUT = 1313.13
STA 2+44	20° ELBOW 12" RCP	12" FL IN = 1314.30 12" FL OUT = 1314.30
STA 2+58	35° ELBOW 12" RCP	12" FL IN = 1314.44 12" FL OUT = 1314.44

Pipe Table					
STA	Description	Length	Slope	FL OUT	FL IN
0+00 - 0+32	12" 1500D RCP	32	0.92%	1312.00	1312.29
0+32 - 1+20	12" 1500D RCP	88	0.95%	1312.29	1313.13
1+20 - 2+44	12" 1500D RCP	124	0.95%	1313.13	1314.30
2+44 - 2+58	12" 1500D RCP	14	0.95%	1314.30	1314.44
2+58 - 2+66	12" 1500D RCP	8	0.95%	1314.44	1314.52

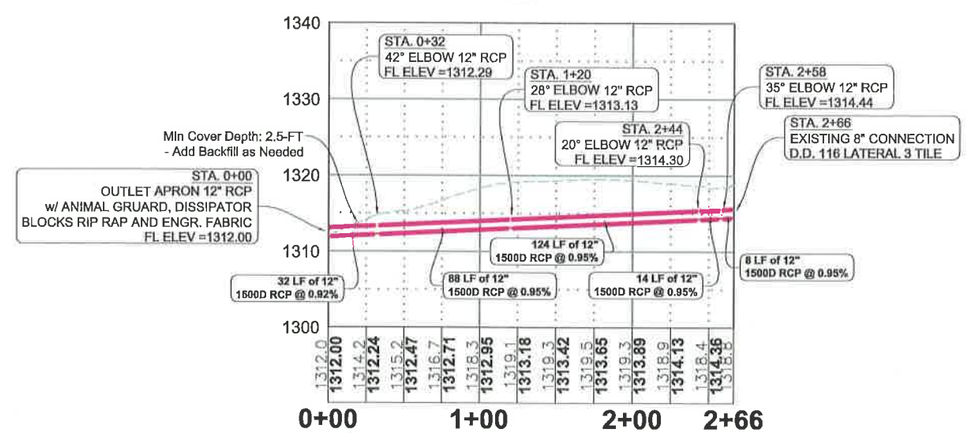

JACOBSON–WESTERGARD & ASSOCIATES, INC.
105 S. SIXTH ST. ESTHERVILLE, IOWA
PHONE: (712) 362-2647 Toll Free (866) 215-2298
E-MAIL: jwa@jacobson-westergard.com
Web Site: www.jacobson-westergard.com
CONSULTING ENGINEERS LAND SURVEYING

REVISIONS	BY	DATE

CREP Wetland Project
BV933619D
Buena Vista County, Iowa

D.D. 102 MAIN TILE &
D.D. 116 LATERAL 3 TILE
PLAN & PROFILE

Date 1/31/21
Designer DLH
Draftsman DDB
Checker DLH

Project Number
E18141
Sheet
D.08

CIVIL 3D PROJECTS\2018\E18141\E18141 - SITE

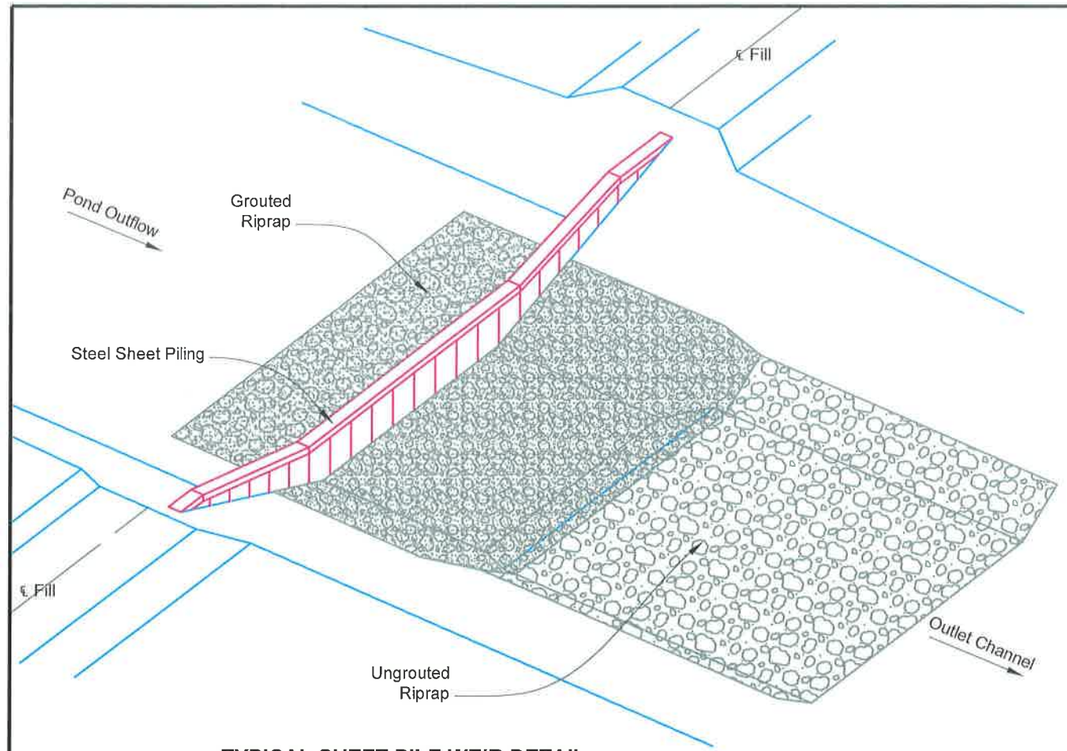

TYPICAL SHEET PILE WEIR DETAIL

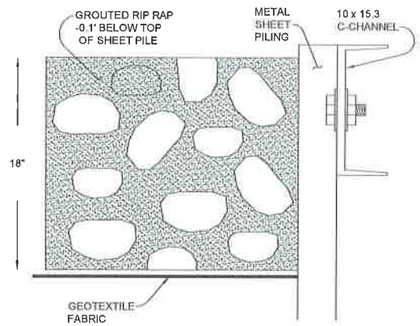

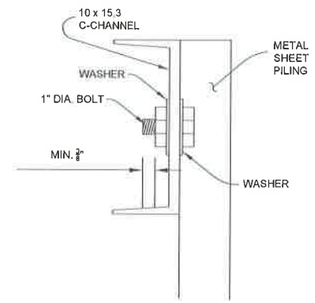

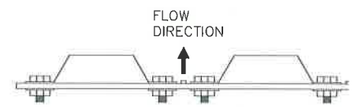

TYPICAL WALER DETAIL

NOTES:

1. ALL BOLTS MUST BE 1" IN DIAMETER WITH 2 WASHERS, AND BOLTS SHALL EXTEND AT LEAST 3/8" BEYOND NUT.
2. ALL HOLES SHALL BE FIELD DRILLED, 1/16" LARGER THAN BOLTS USED.
3. TWO BOLTS SHALL BE REQUIRED WHEN THE WALER IS PLACED AGAINST THE SPLICE. ONE BOLT SHALL BE REQUIRED WHEN THE WALER IS PLACED OPPOSITE THE SPLICE.
4. THE WALER SHALL BE PLACED ON THE DOWNSTREAM SIDE OF THE WEIR.

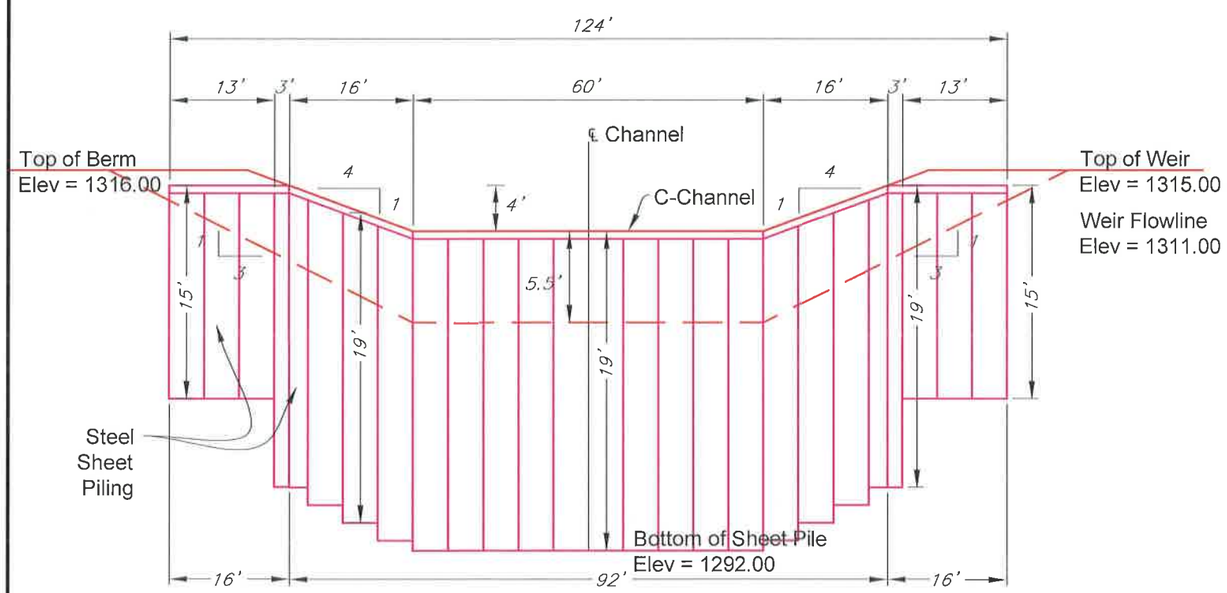

WEIR CROSS-SECTION

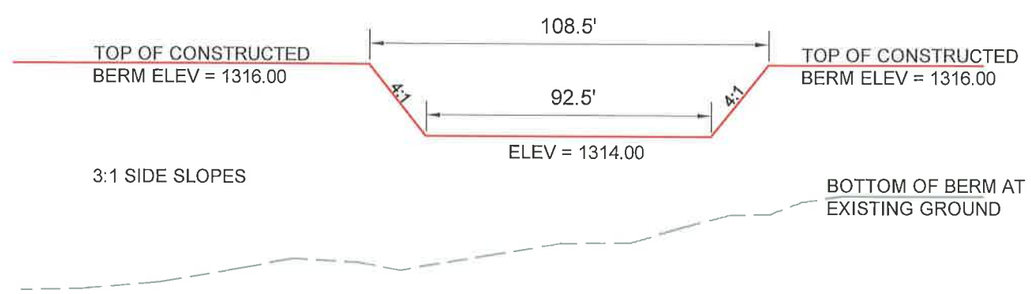

SPILLWAY CROSS-SECTION

JACOBSON-WESTERGARD & ASSOCIATES, INC.
105 S. SIXTH ST. ESTHERVILLE, IOWA
PHONE: (712) 362-2647 Toll Free (866) 215-2298
E-MAIL: jwa@jacobson-westergard.com
Web Site: www.jacobson-westergard.com
CONSULTING ENGINEERS LAND SURVEYING

REVISIONS	BY	DATE

CREP Wetland Project
BV933619D
Buena Vista County, Iowa

WEIR & SPILLWAY DETAILS

Date	5/18/20
Designer	DLH
Draftsmen	DDB
Checker	DLH

Project Number
E18141
Sheet
U.01

CIVIL 3D PROJECTS\2018\E18141\E18141 - DETAILS.dwg

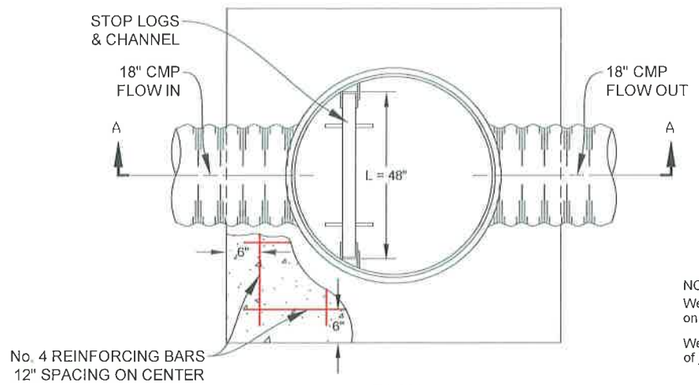

PLAN
CONTROL STRUCTURE

MATERIAL LIST FOR RISER CONCRETE BASE

DIA. OF RISER IN INCHES	48	54	60	66	72	78
CONCRETE, CU.YDS.	1.33	1.56	1.81	2.08	2.37	2.68
NO. 4 REINFORCING BAR, LIN.FT.	66	84	91	112	120	144
LENGTH OF EACH BAR, FT.-IN.	5-6	6-0	6-6	7-0	7-6	8-0
TOTAL NUMBER OF BARS	12	14	14	16	16	18
TOTAL WEIGHT - NO. 4 BARS, LBS.	44.1	56.1	60.8	74.8	80.2	96.2

NO. 4 REINFORCING BAR = 1/2 IN. DIA. = 0.668 LBS./LIN.FT.

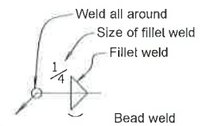

NOTE:
Weld symbol placed above line indicates weld is on opposite side of joint to which arrow points.

Weld symbol below line indicates weld is on side of joint to which arrow points.

WELD SYMBOLS

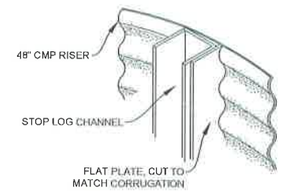

CHANNEL INSTALLATION

REQUIREMENT TABLE

X IN BOX INDICATES THE REQUIREMENTS THAT APPLY TO STRUCTURE — INDICATES - NOT APPLICABLE

CONCRETE: CLASS ☐ 3000 ☐ 3000M ☒ 4000

CORRUGATED METAL PIPE RISER, 48" DIA., 14 GA., 9.5 FT.
PIPE TEE: 18" DIA., 14 GA., 4 FT NOMINAL LENGTH, WELDED TO RISER
PIPE TEE (DRAWDOWN): 18" DIA., 14 GA., 4 FT NOMINAL LENGTH, WELDED TO RISER

PIPE CLASSIFICATION	RISER	PIPE TEE	DRAWDOWN
ANNULAR CORRUGATION	☒	☒	☒
HELICAL CORRUGATION	☐	☐	☐
☐ TYPE I, FULL CIRCULAR CROSS-SECTION FABRICATED	☐	☐	☐
☐ TYPE II, THIS IS TYPE I PIPE WHICH HAS BEEN REFORMED INTO A PIPE ARCH HAVING APPROXIMATELY A FLAT BOTTOM	—	☐	—
CORRUGATION REQUIREMENTS - NOMINAL SIZE (INCH)			
☒ 2 2/3 x 1/2	☒	☒	☒
☐ 3 x 1	☐	☐	☐
COATINGS AND FABRICATION			
SEE METAL PIPE REQUIREMENTS AND COUPLING BANDS SHEET			

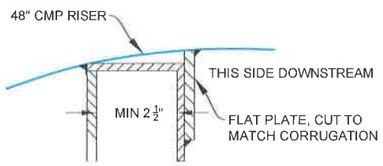

DETAIL OF CHANNEL

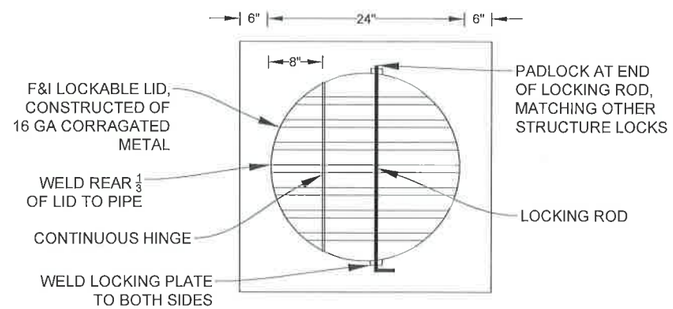

STOP LOG STORAGE STRUCTURE - PLAN

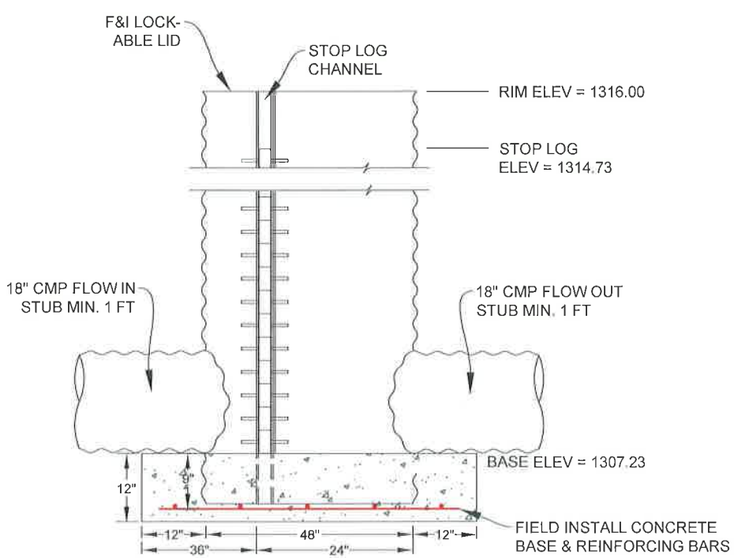

SECTION A-A
STOP LOG FLOW CONTROL- FULL RISER

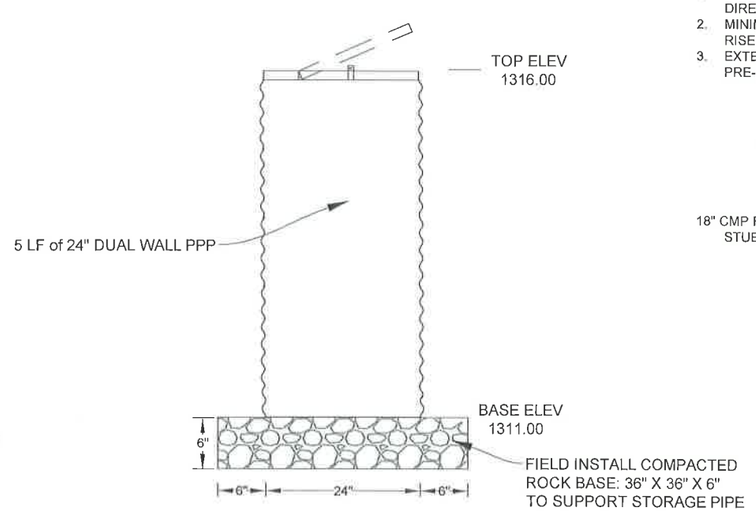

STOP LOG STORAGE STRUCTURE - PROFILE

DRAWDOWN STRUCTURE NOTES:

1. FABRICATION OF RISERS ON HELICAL PIPE SHALL BE DONE USING A FILLER STRIP TO INSURE A WATERTIGHT SEAL BETWEEN THE RISER AND TEE.
2. WHEN MORE THAN ONE COATING IS CHECKED IN THE COLUMN BOXES, EACH TYPE WILL BE ACCEPTABLE BUT ONLY ONE TYPE OF COATING SHALL BE USED IN EACH INSTALLATION.
3. ALL WELDS AND HEAT AFFECTED AREAS ON GALVANIZED METAL SHALL BE TREATED IN ACCORDANCE WITH SPECIFICATIONS.
4. No. 4 REINFORCED BAR = 1/2" DIAMETER (0.668 LB/LF)
5. ALL SEAMS CUT DUE TO FABRICATING IN HELICAL PIPE SHALL BE WELDED FOR A LENGTH OF 1-INCH FROM THE CUT EDGE AND TREATED IN ACCORDANCE WITH THE SPECIFICATIONS.
6. A LADDER SHALL BE WELDED TO THE INTERIOR OF THE RISER STRUCTURE FOR ACCESS AS NEEDED.
7. THE "L" DIMENSION WITHIN THE RISER SHALL BE CHECKED PRIOR TO FABRICATION OF THE STRUCTURAL TUBING LENGTH.
8. THE LOCKABLE LID SHALL BE FABRICATED FROM CMP, AND CUT IN A CIRCULAR SHAPE TO FIT THE RISER. HOLES SHALL BE DRILLED THROUGH THE CORROGATIONS TO PASS THE LOCKING BAR.

CHANNEL INSTALLATION:

1. F&I 15, 2-INCH WIDE X 6-INCH DEEP STOP-LOGS EXTENDING FROM ELEV 1307.23 TO ELEV 1315.0. STOP LOGS SHALL BE MANUFACTURED ALUMINUM OR PVC.
2. STOP LOG CHANNELS SHALL BE CONSTRUCTED TO ACCOMODATE THE SUPPLIED STOP LOGS ACCORDING TO THE MANUFACTURER'S REQUIREMENTS. PRE-FABRICATED CHANNELS MAY BE USED IN LIEU OF CHANNEL SHOWN.
3. CHANNEL AND STOP LOGS MUST PROVIDE A WATERTIGHT SEAL.
4. BOTTOM CHANNEL SHALL BE PROVIDED AND MAY BE SET INTO CONCRETE.
5. CONTRACTOR SHALL PROVIDE DETAILED SHOP DRAWINGS OF CONTROL STRUCTURE.
6. STOP LOG SET LEVEL SHALL BE AS DIRECTED BY OWNER, DO NOT SET LOGS UNTIL DIRECTED TO DO SO.
7. CONTRACTOR SHALL FURNISH 2 10-FOOT LONG LIFTING RODS.

RISER INLET STRUCTURE NOTES:

1. CONCRETE BASE SHALL BE REINFORCED WITH No. 4 BARS AT 12-INCHES ON CENTER, BOTH DIRECTIONS.
2. MINIMUM OF 36 2-INCH HOLES SHALL BE DRILLED AROUND THE ENTIRE LENGTH OF 36" CMP RISER PIPE, EVENLY SPACED AROUND THE CIRCUMFERENCE AND HEIGHT.
3. EXTERNALLY MOUNTED GRATE, AT TOP OF RISER PIPE, SHALL BE CONTECH STORMRAX OR PRE-APPROVED EQUAL.

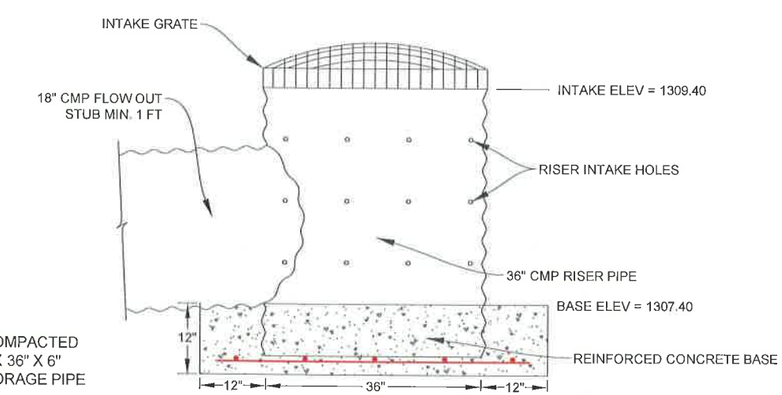

RISER INLET STRUCTURE DETAIL

*THIS PLAN MODIFIED FROM NRCS STANDARD DETAIL

JACOBSON-WESTERGARD & ASSOCIATES, INC.
105 S. SIXTH ST. ESTHERVILLE, IOWA
PHONE: (712) 362-2647 Toll Free (866) 215-2298
E-MAIL: jwa@jacobson-westergard.com
Web Site: www.jacobson-westergard.com
CONSULTING ENGINEERS LAND SURVEYING

REVISIONS	BY	DATE

CREP Wetland Project
BV933619D
Buena Vista County, Iowa

INLINE CONTROL STRC
DETAILS

Date	5/18/20
Designer	DLH
Draftsman	DDB
Checker	DLH

Project Number
E18141
Sheet
U.02

CIVIL 3D PROJECTS\2018\E18141\E18141 - DETAILS.dwg