PLANS

Intentionally Blank

CONSTRUCTION PLANS FOR

IDALS PROJECT NO. STO852118B

NUTRIENT REMOVAL CONSTRUCTED WETLAND

STORY COUNTY, IOWA

2024

PLAN REVISIONS		
REV	ISSUED FOR	DATE
-	-	-

GOVERNING SPECIFICATIONS

THE SPECIFICATIONS AS PREPARED BY IOWA DEPARTMENT OF AGRICULTURE AND LAND STEWARDSHIP AND BOLTON & MENK, INC. SHALL BE CONSIDERED AS PART OF THIS DOCUMENT. NATURAL RESOURCES CONSERVATION SERVICE CONSTRUCTION SPECIFICATIONS SHALL APPLY.

THE CURRENT EDITION OF THE "IOWA STATEWIDE URBAN STANDARD SPECIFICATIONS FOR PUBLIC IMPROVEMENTS" SHALL GOVERN.

IOWA DEPARTMENT OF TRANSPORTATION "STANDARD SPECIFICATIONS FOR HIGHWAY AND BRIDGE CONSTRUCTION",
SERIES 2023 AND ALL CURRENT GENERAL SUPPLEMENTAL SPECIFICATIONS AND MATERIALS INSTRUCTIONAL MEMORANDUM
SHALL GOVERN AS REFERENCED.

ALL APPLICABLE FEDERAL, STATE, AND LOCAL LAWS AND ORDINANCES WILL BE COMPLIED WITH IN THE CONSTRUCTION
OF THIS PROJECT.

IOWA ONE CALL
1-800-292-8989
www.iowaonecall.com
811

THE SUBSURFACE UTILITY INFORMATION IN THIS PLAN IS UTILITY QUALITY LEVEL D. THIS UTILITY QUALITY LEVEL WAS DETERMINED ACCORDING TO THE GUIDELINES OF CI/ASCE 38-02, ENTITLED "STANDARD GUIDELINES FOR THE COLLECTION AND DEPICTION OF EXISTING SUBSURFACE UTILITY DATA."

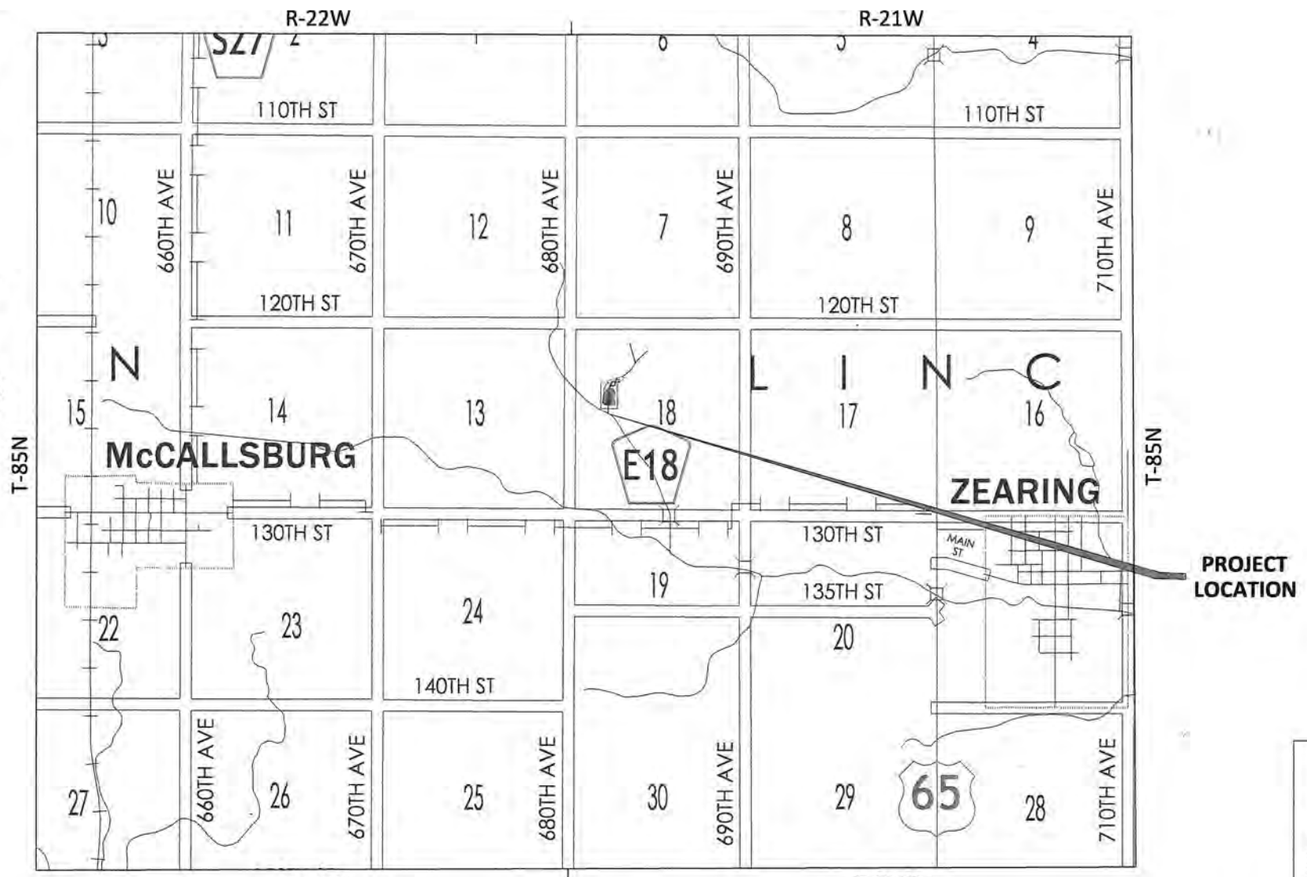

SHEET LIST TABLE	
SHEET NUMBER	SHEET TITLE
A.01	TITLE SHEET
A.02	EXISTING SITE CONDITIONS
A.03	SITE OVERVIEW
A.04	POND OVERVIEW
B.01	RCP INSTALLATION
B.02	CPDT INSTALLATION
B.03	IOWA DOT STRUCTURE & INLET RISER DETAILS
B.04	STOPLOG STRUCTURE DETAILS
B.05	STILLING BASIN DETAIL
B.06	SHEET PILE DETAIL
B.07	SEEDING MAP
C.01	ESTIMATED QUANTITIES & REFERENCE NOTES
D.01	PLAN & PROFILE - EMBANKMENT
D.02	PLAN & PROFILE - BERM A & AUXILIARY SPILLWAY
D.03	PLAN & PROFILE - BERM B & BERM C
D.04	SEDIMENT FOREBAY & POND EXPANSION
M.01	PLAN & PROFILE - TILE DIVERSION
M.02	PLAN & PROFILE - DRAWDOWN PIPE & TOE DRAIN

IF A CULTURAL RESOURCE IS IDENTIFIED DURING CONSTRUCTION, WORK MUST STOP AND IDALS AND THE ENGINEER MUST BE NOTIFIED.

THESE PLANS PREPARED IN ACCORDANCE WITH NRCS ENGINEERING JOB CLASS IV. STANDARDS FOR TASKS ARE AS FOLLOWS:
656 - SITE DESIGN
410 - OUTLET CAPACITY
378 - POOL DESIGN
TO THE BEST OF MY PROFESSIONAL KNOWLEDGE, JUDGEMENT, AND BELIEVE, THESE PLANS MEET APPLICABLE NRCS STANDARDS.

PROJECT DATUM: STATE PLANE
HORIZONTAL: IOWA NORTH
VERTICAL: NAVD 1988

LICENSED PROFESSIONAL ENGINEER
JONATHAN P. ROSENGREN 21661
IOWA

I HEREBY CERTIFY THAT THIS ENGINEERING DOCUMENT WAS PREPARED BY ME OR UNDER MY DIRECT PERSONAL SUPERVISION AND THAT I AM A DULY LICENSED PROFESSIONAL ENGINEER UNDER THE LAWS OF THE STATE OF IOWA.

JONATHAN P. ROSENGREN, P.E.

REG. NO. 21661 DATE: April 25, 2024

MY LICENSE RENEWAL DATE IS 12/31/2024

PAGES OR SHEETS COVERED BY THIS SEAL:

ALL PLAN SHEETS

BOLTON & MENK
1519 BALTIMORE DRIVE
AMES, IOWA 50010
Phone: (515) 233-6100
Email: Ames@bolton-menk.com
www.bolton-menk.com

DESIGNED	TJB
DRAWN	TJB
CHECKED	JPR
CLIENT PROJ. NO.	017.131410

REV	DESCRIPTION	DATE

IDALS WATER RESOUCES BUREAU
HENDERSON - PROJECT NO. STO852118B
TITLE SHEET

SHEET A.01

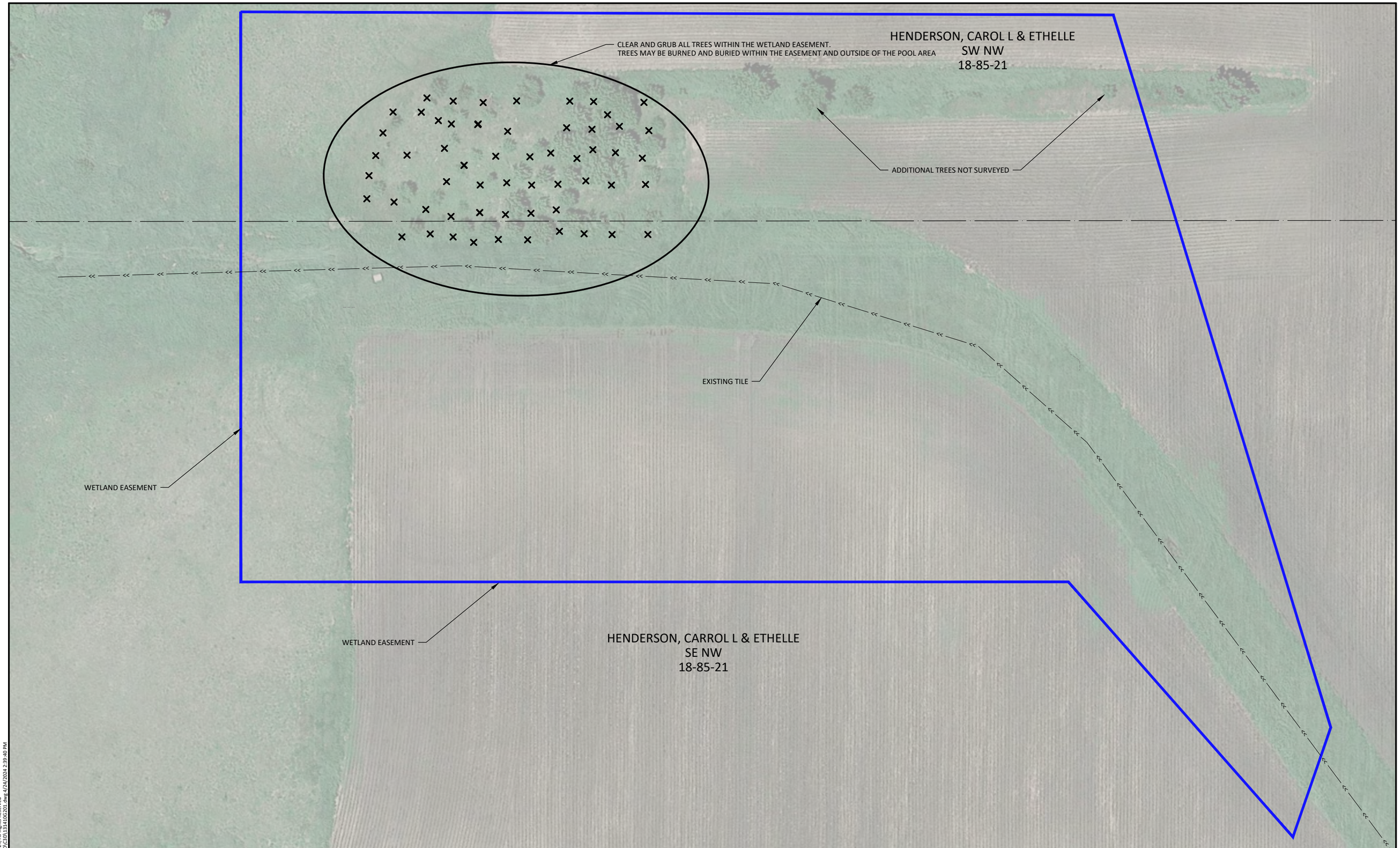

HORZ. 0 30 60
SCALE FEET

BOLTON & MENK

1519 BALTIMORE DRIVE
AMES, IOWA 50010
Phone: (515) 233-6100
Email: Ames@bolton-menk.com
www.bolton-menk.com

DESIGNED	TJB
DRAWN	TJB
CHECKED	JPR
CLIENT PROJ. NO.	0T7.131410

REV	DESCRIPTION	DATE

IDALS WATER RESOUCES BUREAU

HENDERSON - PROJECT NO. STO852118B

EXISTING SITE CONDITIONS

SHEET A.02

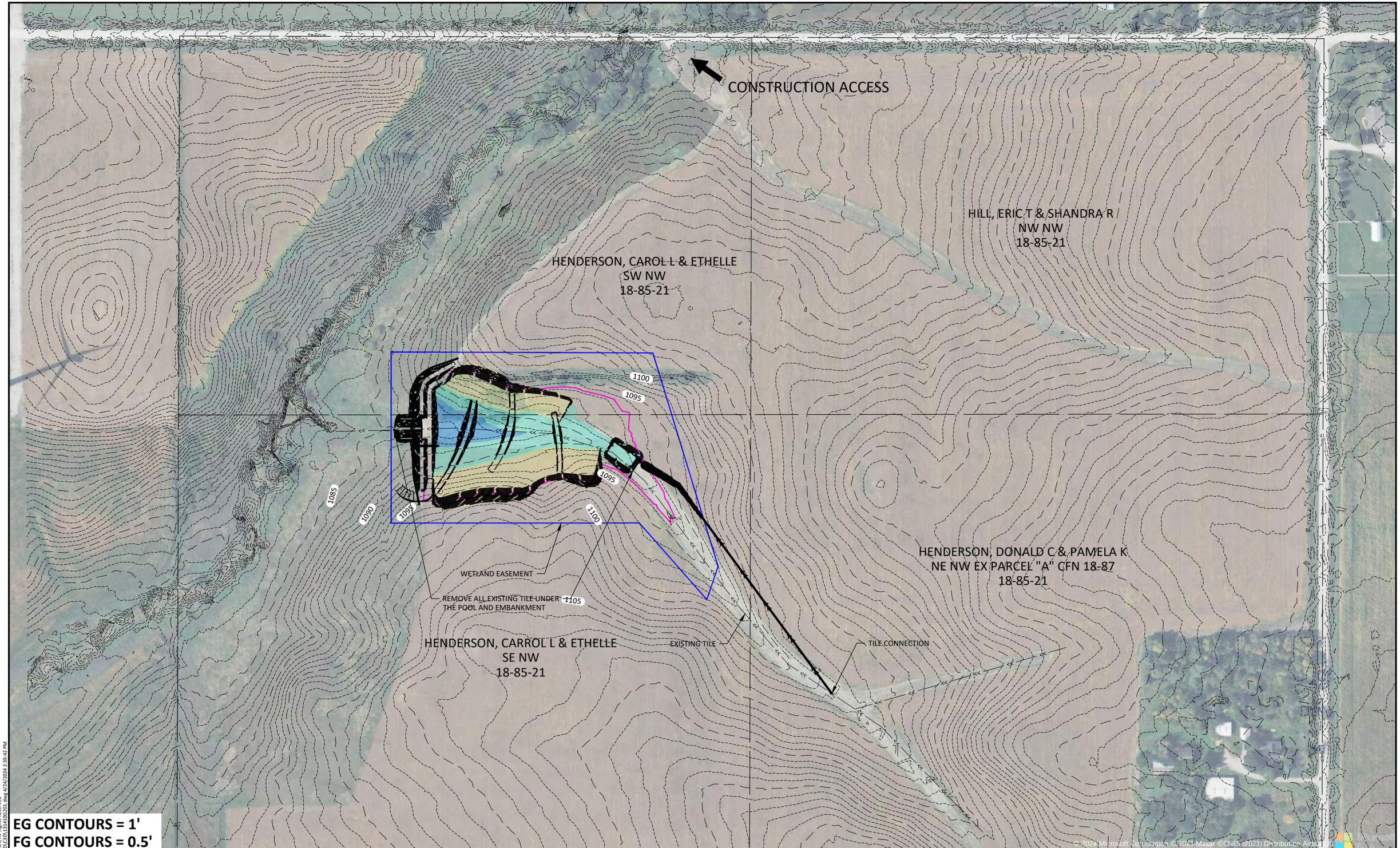

EG CONTOURS = 1'
FG CONTOURS = 0.5'

HORZ. SCALE 0 100 200 FEET

BOLTON & MENK
1519 BALTIMORE DRIVE
AMES, IOWA 50010
Phone: (515) 233-6100
Email: Ames@bolton-menk.com
www.bolton-menk.com

DESIGNED	TJB
DRAWN	TJB
CHECKED	JPR
CLIENT PROJ. NO.	OT7.131410

REV	DESCRIPTION	DATE

IDALS WATER RESOUCES BUREAU
HENDERSON - PROJECT NO. STO852118B
SITE OVERVIEW

SHEET A.03

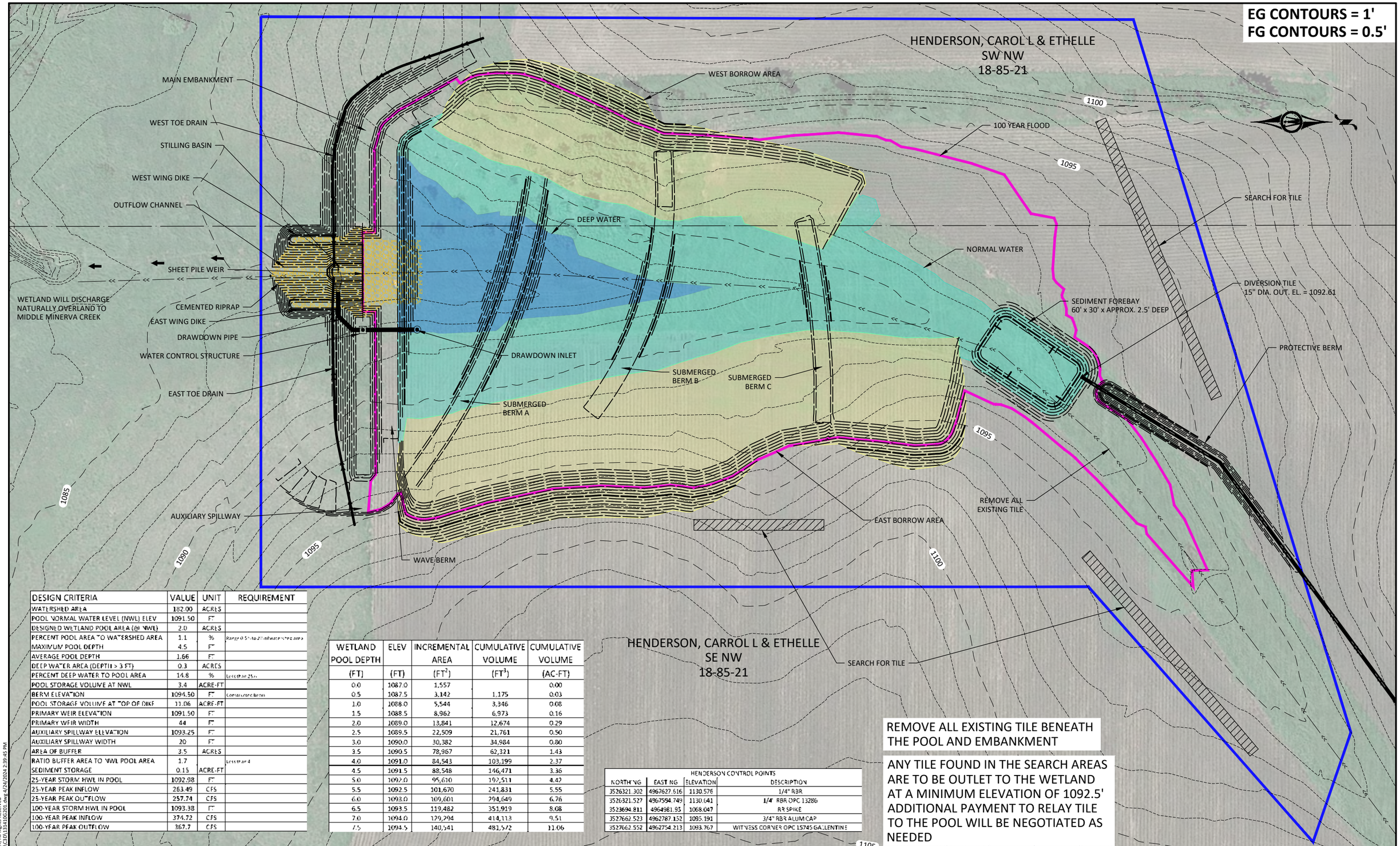

DESIGN CRITERIA	VALUE	UNIT	REQUIREMENT
WATERSHED AREA	182.00	ACRES	
POOL NORMAL WATER LEVEL (NWL) ELEV	1091.50	FT	
DESIGNED WETLAND POOL AREA (@ NWL)	2.0	ACRES	
PERCENT POOL AREA TO WATERSHED AREA	1.1	%	Range 0.5% to 2% of watershed area
MAXIMUM POOL DEPTH	4.5	FT	
AVERAGE POOL DEPTH	1.66	FT	
DEEP WATER AREA (DEPTH > 3 FT)	0.3	ACRES	
PERCENT DEEP WATER TO POOL AREA	14.8	%	Less than 25%
POOL STORAGE VOLUME AT NWL	3.4	ACRE-FT	
BERM ELEVATION	1094.50	FT	Constructed Berm
POOL STORAGE VOLUME AT TOP OF DIKE	11.06	ACRE-FT	
PRIMARY WEIR ELEVATION	1091.50	FT	
PRIMARY WEIR WIDTH	44	FT	
AUXILIARY SPILLWAY ELEVATION	1093.25	FT	
AUXILIARY SPILLWAY WIDTH	20	FT	
AREA OF BUFFER	3.5	ACRES	
RATIO BUFFER AREA TO NWL POOL AREA	1.7		Less than 4
SEDIMENT STORAGE	0.15	ACRE-FT	
25-YEAR STORM HWL IN POOL	1092.98	FT	
25-YEAR PEAK INFLOW	263.49	CFS	
25-YEAR PEAK OUTFLOW	257.74	CFS	
100-YEAR STORM HWL IN POOL	1093.38	FT	
100-YEAR PEAK INFLOW	374.72	CFS	
100-YEAR PEAK OUTFLOW	367.7	CFS	

WETLAND POOL DEPTH (FT)	ELEV (FT)	INCREMENTAL AREA (FT^2)	CUMULATIVE VOLUME (FT^3)	CUMULATIVE VOLUME (AC-FT)
0.0	1087.0	1,557		0.00
0.5	1087.5	3,142	1,175	0.03
1.0	1088.0	5,544	3,346	0.08
1.5	1088.5	8,962	6,973	0.16
2.0	1089.0	13,841	12,674	0.29
2.5	1089.5	22,509	21,761	0.50
3.0	1090.0	30,382	34,984	0.80
3.5	1090.5	78,967	62,321	1.43
4.0	1091.0	84,543	103,199	2.37
4.5	1091.5	88,548	146,471	3.36
5.0	1092.0	95,610	192,511	4.42
5.5	1092.5	101,670	241,831	5.55
6.0	1093.0	109,601	294,649	6.76
6.5	1093.5	119,482	351,919	8.08
7.0	1094.0	129,294	414,113	9.51
7.5	1094.5	140,541	481,572	11.06

HENDERSON CONTROL POINTS

NORTHING	EASTING	ELEVATION	DESCRIPTION
3526321.302	4967627.616	1130.576	1/4" RBR
3526321.527	4967594.749	1130.641	1/4" RBR OPC 13286
3523694.811	4964981.93	1068.047	RR SPIKE
3527662.523	4962787.152	1095.191	3/4" RBR ALUM CAP
3527662.552	4962754.213	1093.767	WITNESS CORNER OPC 15745 GALLENTINE

REMOVE ALL EXISTING TILE BENEATH THE POOL AND EMBANKMENT

ANY TILE FOUND IN THE SEARCH AREAS ARE TO BE OUTLET TO THE WETLAND AT A MINIMUM ELEVATION OF 1092.5' ADDITIONAL PAYMENT TO RELAY TILE TO THE POOL WILL BE NEGOTIATED AS NEEDED

HORZ. 0 30 60 SCALE FEET

BOLTON & MENK

1519 BALTIMORE DRIVE
AMES, IOWA 50010
Phone: (515) 233-6100
Email: Ames@bolton-menk.com
www.bolton-menk.com

DESIGNED TJB
DRAWN TJB
CHECKED JPR
CLIENT PROJ. NO. 017.131410

REV	DESCRIPTION	DATE

IDALS WATER RESOUCES BUREAU
HENDERSON - PROJECT NO. STO852118B
POND OVERVIEW

SHEET A.04

PIPE HAUNCH FILL AND COMPACTION METHOD
PLAN REQUIREMENTS COMPLIANCE VERIFICATION

THE CONTRACTOR IS SOLEY RESPONSIBLE FOR THE INSTALLATION OF ALL PIPE ACCORDING TO PLAN REQUIREMENTS. THE CONTRACTOR'S PARTICIPATION IN AND COMPLIANCE WITH THE FOLLOWING PROCEDURE IS REQUIRED AND WILL ALLOW FOR FEWER SOIL DENSITY TESTS TO ENSURE PROPER PIPE INSTALLATION.

STEP 1
BEFORE COMMENCING PIPE INSTALLATION, STANDARD SOIL PROCTOR DENSITY TEST RESULTS OF REPRESENTATIVE SAMPLE(S) OF PIPE HAUNCH FILL SHALL BE PROVIDED BY AN INDEPENDENT QUALIFIED SOILS TESTING LAB. THE SELECTION OF THE SAMPLE(S) WILL BE MADE BY THE ENGINEER AND CONTRACTOR (WHEN SPECIFIED).

STEP 2
CONTRACTOR MAY BEGIN EXCAVATING THE MODIFIED TYPE 4 TRENCH
WITH THE REQUIRED SHAPED BOTTOM GROOVE AND PLACE SEVERAL PIPE SECTIONS ONLY WHEN BOTH ENGINEER AND TESTING LAB TECHNICIAN ARE PRESENT

CONTRACTOR SHALL DEMONSTRATE THE INTENDED METHODS FOR COMPACTING THE FILL FOR THE PIPE HAUNCH AREAS. SOIL DENSITY TESTS SHALL BE TAKEN AT LOCATIONS DESIGNATED BY THE ENGINEER TO CONFIRM THAT THE INTEDNED METHODS FOR FILL AND COMPACTION OF THE PIPE HAUNCH AREAS SATIFIES THE PLAN REQUIREMENTS. CONTRACTOR SHALL MODIFIY THE INSTALLATION METHODS AND REPEAT STEP 2 UNTIL ACCEPTABLE TESTS RESULTS ARE ACHIEVED.

STEP 3
CONTRACTOR MAY INSTALL THE NEXT SEVERAL HUNDRED FEET OF PIPE. ENGINEER SHALL DESIGNATE SEVERAL LOCATIONS (APPROXIMATELY 10% OF THE INSTALLED LENGTH) WHERE CONTRACTOR SHALL LEAVE THE PIPE UNBLINDED FOR FURTHER DENSITY TESTS OF THE HAUNCH FILL AREA. ALL DENSITY TESTS MUST MEET PLAN REQUIREMENTS BEFORE WORK MAY PROCEED FURTHER.

IF DENSITY TESTING DATA CONFIRMS TO THE SATISFACTION OF THE ENGINEER THAT THE CONTRACTOR'S INSTALLATION METHOD WILL PRODUCE CONSISTENT COMPLIANCE WITH PLAN REQUIREMENTS, CONTRACTOR MAY CONTINUE INSTALLATION OF THE PIPE WITH NO ADDITIONAL TESTING REQUIRED. IF NOT, STEPS 2 AND 3 SHALL BE REPEATED UNTIL A RELIABLE, SUCCESSFUL METHOD OF PIPE INSTALLATION THAT PRODUCES SATISFACTORY RESULTS IS ESTABLISHED.

CONTRACTOR IS REQUIRED TO PROPERLY AND ADEQUATELY INSTRUCT SUBCONTRACTORS AND/OR SUBSEQUENT PIPE INSTALLATION WORKERS ON THE PROPER INSTALLATION METHOD.

STEP 4A
SOIL OR TRENCH CONDITION CHANGES

TO VERIFY CONTRACTOR'S COMPLIANCE WITH PLAN REQUIREMENTS UNDER THE CHANGED CONDITIONS, ENGINEER MAY STOP WORK AND REQUIRE ADDITIONAL SOIL PROCTOR TESTS AND/OR SOIL DENSITY TESTS SIMILAR TO STEPS 1 THROUGH 3. THE WORK AND COSTS OF THE FIRST TWO REVERIFICATIONS IS SUBSIDIARY TO THE PIPE INSTALLATION. SUBSEQUENT VERIFICATIONS WILL BE CONSIDERED EXTRA WORK.

STEP 4B
CONTRACTOR FAILS TO CONSISTENTLY PERFORM INSTALLATION METHOD OR INSTRUCT OTHER INSTALLERS

IF CONTRACTOR FAILS TO CONSISTENTLY PERFORM OR ADEQUATELY INSTRUCT SUBCONTRACTORS AND/OR SUBSEQUENT PIPE INSTALLATION WORKERS ON THE APPROVED INSTALLATION METHOD, ENGINEER MAY STOP WORK AND REQUIRE ADDITIONAL SOIL PROCTOR TESTS AND/OR SOIL DENSITY TESTS SIMILAR TO STEPS 1 THROUGH 3 TO VERIFY CONTRACTOR'S COMPLIANCE WITH PLAN REQUIREMENTS. THE WORK AND COSTS OF ALL VERIFICATIONS UNDER SUCH CONDITIONS IS SUBSIDIARY TO THE PIPE INSTALLATION.

EXCEPTION
IF CONTRACTOR ELECTS TO SHAPE THE TRENCH BOTTOM SUCH THAT A MINIMUM OF 45% OF THE OUTER CIRCUMFERENCE OF THE PIPE IS FIRMLY BEDDED IN AND CONSISTENTLY SUPPORTED BY UNDISTURBED SOIL, PIPE HAUNCH FILL COMPACTION TESTING WILL NOT BE REQUIRED. THE CONTRACTOR IS REQUIRED TO COMPLY WITH A PROPER INSTALLATION METHOD AND TO FULLY COMPLY WITH THE REQUIREMENTS OF THE VERIFICATION OUTLINED ABOVE FOR ALL SITUATIONS WHERE THIS EXCEPTION IS NOT MET.

CRUSHED ROCK MEETING THE GRADATION OF SUDAS CLASS I BEDDING MATERAL, SPECIFICATION SECTION 3010.2.02.A, MAY BE SUBSTITUTED FOR THE SAND OR CLAY HAUNCH BACKFILL MATERIAL. NO COMPACTION WILL BE REQUIRED FOR THE CRUSHED ROCK BEDDING AND BACKFILL. MATERIAL COSTS SHALL BE INCIDENTAL TO PIPE INSTALLATION.

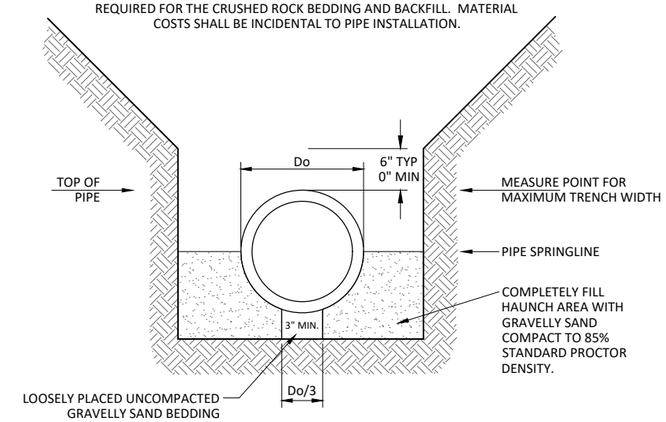

GRAVELLY SAND BEDDING SHALL BE CONSISTENT WITH THE GRADATION AND OTHER CHARACTERISTICS OF STANDARD AASHTO A1 OR A3 SOIL. A REPRESENTATIVE SAMPLE OF THE MATERIAL AND A GRADATION REPORT OR SUPPLIER'S CERTIFICATION OF COMPLIANCE SHALL BE SUBMITTED TO THE ENGINEER FOR APPROVAL PRIOR TO DELIVERY TO SITE. SEE SOIL DATA IN APPENDIX OF SPECIFICATIONS BOOKLET.

TRENCH INSTALLATION TYPE 3
NOT TO SCALE
SOURCE: AMERICAN CONCRETE PIPE ASSOCIATION
CONCRETE PIPE DESIGN MANUAL

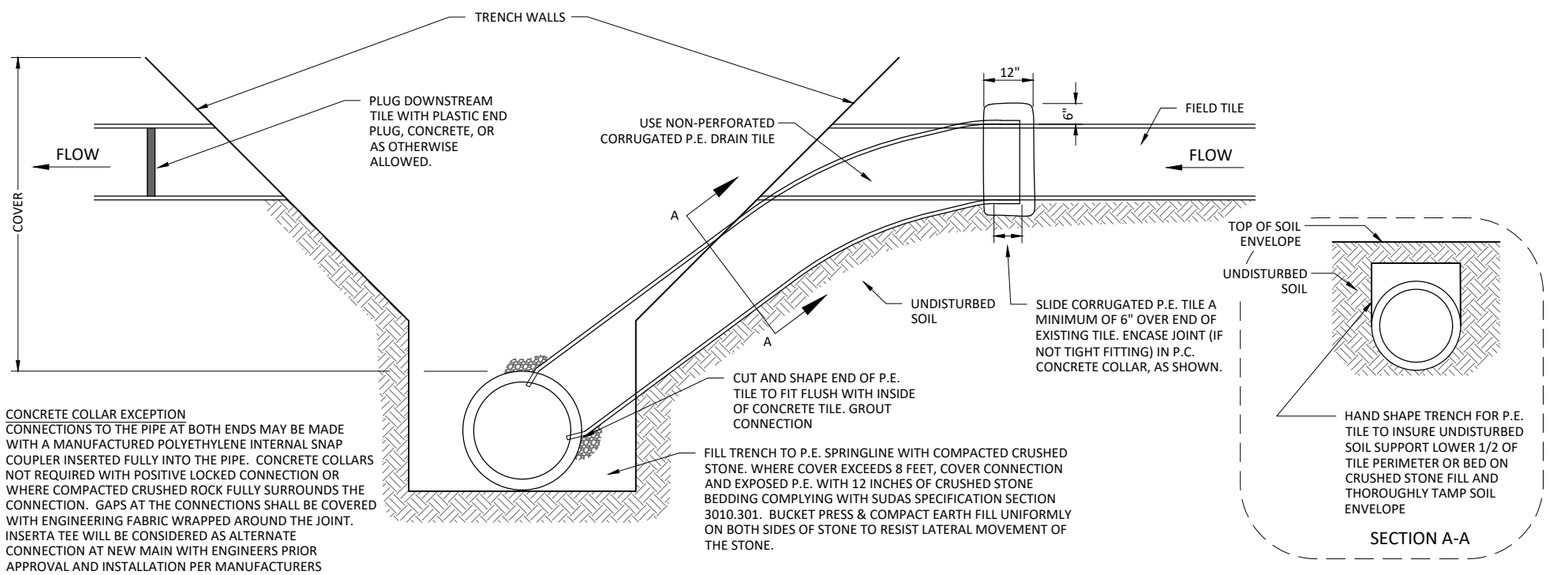

CONCRETE COLLAR EXCEPTION
CONNECTIONS TO THE PIPE AT BOTH ENDS MAY BE MADE WITH A MANUFACTURED POLYETHYLENE INTERNAL SNAP COUPLER INSERTED FULLY INTO THE PIPE. CONCRETE COLLARS NOT REQUIRED WITH POSITIVE LOCKED CONNECTION OR WHERE COMPACTED CRUSHED ROCK FULLY SURROUNDS THE CONNECTION. GAPS AT THE CONNECTIONS SHALL BE COVERED WITH ENGINEERING FABRIC WRAPPED AROUND THE JOINT. INSERTA TEE WILL BE CONSIDERED AS ALTERNATE CONNECTION AT NEW MAIN WITH ENGINEERS PRIOR APPROVAL AND INSTALLATION PER MANUFACTURERS RECOMMENDATION.

TYPICAL FIELD TILE CONNECTION
FOR FIELD TILE UP TO 10" DIAMETER

MINIMUM TRENCH WIDTH SHALL BE OUTSIDE DIAMETER OF PIPE PLUS 12" OR THAT WIDTH WHICH IS REQUIRED FOR COMPACTION, WHICHEVER IS GREATER

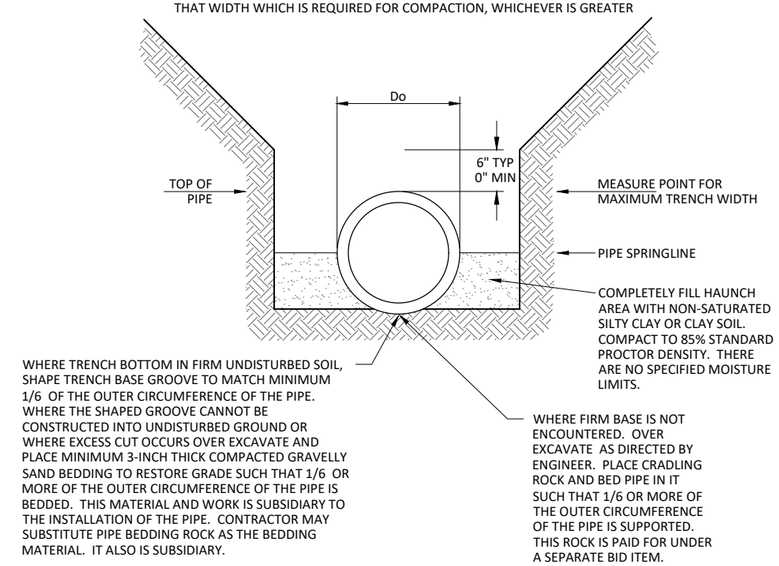

MODIFIED TRENCH INSTALLATION TYPE 4
NOT TO SCALE
SOURCE: AMERICAN CONCRETE PIPE ASSOCIATION
CONCRETE PIPE DESIGN MANUAL

BOLTON & MENK
1519 BALTIMORE DRIVE
AMES, IOWA 50010
Phone: (515) 233-6100
Email: Ames@bolton-menk.com
www.bolton-menk.com

DESIGNED	TJB
DRAWN	TJB
CHECKED	JPR
CLIENT PROJ. NO.	0T7.131410

REV	DESCRIPTION	DATE

IDALS WATER RESOUCES BUREAU
HENDERSON - PROJECT NO. STO852118B
RCP INSTALLATION

SHEET
B.01

CORRUGATED POLYETHYLENE DRAINAGE TUBING MATERIAL & INSTALLATION NOTES

1. ALL CPDT AND CONNECTORS FURNISHED SHALL BE IN COMPLIANCE WITH MATERIAL STANDARDS ASTM F405 AND F667, AS APPLICABLE, AND SHALL BE CLASSIFIED AS HEAVY-DUTY UNDER THOSE STANDARDS.
2. EXCEPT MODIFIED HEREIN OR OTHERWISE APPROVED BY ENGINEER, ALL CPDT SHALL BE INSTALLED IN COMPLIANCE WITH THE ASTM 449 STANDARD PRACTICE.
3. FOR PIPES 6" DIAMETER AND SMALLER A 90° V GROOVE BOTTOM MAY BE USED, FOR ALL LARGER PIPE A TRAPEZOIDAL BOTTOM OR A CIRCULAR BOTTOM CONFORMING TO THE OUTSIDE DIAMETER OF THE PIPE SHALL BE USED. PRIOR TO THE INSTALLATION OF CPDT, CONTRACTOR MUST PROVE TO ENGINEER THAT THE INSTALLATION REQUIREMENTS, INCLUDING THE SHAPE OF THE TRENCH BOTTOM, WILL BE ACCOMPLISHED.
4. WHERE TRENCH BOTTOM IS IN FIRM UNDISTURBED SOIL, SHAPE TRENCH BASE GROOVE. WHERE EXCESS CUT OCCURS, OVEREXCAVATE AND PLACE MINIMUM THREE (3) INCH THICK, GRAVELLY SAND BEDDING TO RESTORE GRADE. THIS BEDDING SHALL MEET THAT REQUIRED FOR TRENCH INSTALLATION TYPE 3 ON PLAN SHEET C.02. IF DUE TO CONTRACTOR ERROR THIS MATERIAL AND WORK IS SUBSIDIARY TO THE INSTALLATION OF THE PIPE. CONTRACTOR MAY SUBSTITUTE PIPE BEDDING ROCK AS THE BEDDING MATERIAL.
5. NATIVE SOILS MAY BE USED AS BACKFILL MATERIAL UNLESS UNSTABLE TRENCH CONDITIONS PREVENT THE TRENCH BOTTOM HOLDING THE SHAPED GROOVE. IF TRENCH BOTTOM WILL NOT HOLD GROOVE SHAPE CONTRACTOR SHALL NOTIFY ENGINEER IMMEDIATELY. A FLAT BOTTOM TRENCH INSTALLATION WILL THEN BE ASSUMED. THE REQUIRED BEDDING MATERIAL WILL BE PAID UNDER THE TILE TRENCH STABILIZATION AND CRADLING ROCK BID ITEM.
6. MINIMUM TRENCH WIDTH IS PIPE OUTSIDE DIAMETER PLUS FOUR (4) INCHES FOR PLOWED INSTALLATION AND PIPE OUTSIDE DIAMETER PLUS TWELVE (12) INCHES FOR OPEN TRENCH INSTALLATION.
7. ALL LATERAL CONNECTIONS, ELBOWS, TEES, ALIGNMENT CURVES, START HOLES AND ALL PORTIONS OF THE TRENCH NOT MEETING THE GROOVED TRENCH INSTALLATION REQUIREMENTS SHALL BE FILLED TO A MINIMUM OF SIX (6) INCH COVER OVER THE PIPE WITH GRADED CRUSHED STONE OR GRAVEL AS SHOWN ON TABLE 2 OF THIS SHEET. UNLESS DUE TO CONTRACTOR ERROR THIS BEDDING MATERIAL WILL BE PAID UNDER THE TILE TRENCH STABILIZATION AND CRADLING ROCK BID ITEM.
8. MANUFACTURER'S ENDCAPS SHALL BE INSTALLED AT THE TERMINATION OF EACH LINE UNLESS A CONNECTION TO AN EXISTING DRAIN IS MADE.
9. WITH THE INSTALLATION OF THE FIRST REACH OF CPDT ON THE PROJECT, CONTRACTOR IS REQUIRED TO WORK WITH THE ENGINEER TO CHECK AND CONFIRM THAT THE PIPE STRETCH, IF ANY, DOES NOT EXCEED 5%.
10. ALIGNMENT TURNS MAYBE MADE USING EITHER A MANUFACTURED FITTING OR CURVING THE LINE WITH A 25' MINIMUM RADIUS.

Table 1
Maximum Allowable Buried Depth to Flowline of CPDT

Nominal Pipe Diameter (IN)	Pipe Quality (ASTM)	Trench Width at Top of the Pipe (FT)			
		12"	18"	24"	30" or Greater
4	Standard	13	7	5.5	5
	Heavy-duty	Any	10	7	6
6	Standard	10	7	5.5	5
	Heavy-duty	Any	9.5	6.5	6
8	Standard	10	7	5.5	5
	Heavy-duty	Any	10	7	6
10	Heavy-duty	...	9	7	6
12	Heavy-duty	...	9	7	6
15	Heavy-duty	...	...	7	6

Table 2
Acceptable Bedding Material and Compaction Requirements

Description	Percentage Passing Sieve Sizes			Minimum Standard Density (%)	Maximum Compaction Layer Height (IN.)
	1"	3/4"	No. 4		
Crushed Stone Crushed Gravel*	100%	> 95%	< 5%	Dumped	18

* Class 1 Bedding Material Per SUDAS 3010.202A is an Allowable Substitute

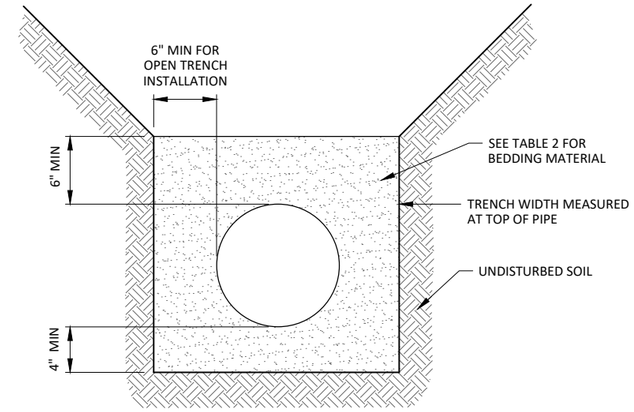

FILL TRENCH TO 6" ABOVE TOP OF PIPE WITH CRUSHED STONE OR GRAVEL MEETING THE REQUIREMENTS IN TABLE 2. BEDDING MATERIAL SHALL BE INCIDENTAL TO THE PIPE INSTALLATION.

FLAT BOTTOM TRENCH INSTALLATION

NOT TO SCALE

SOURCE: ASTM F449

NOTE: THIS IS AN ALLOWED ALTERNATIVE INSTALLATION FOR CPDT

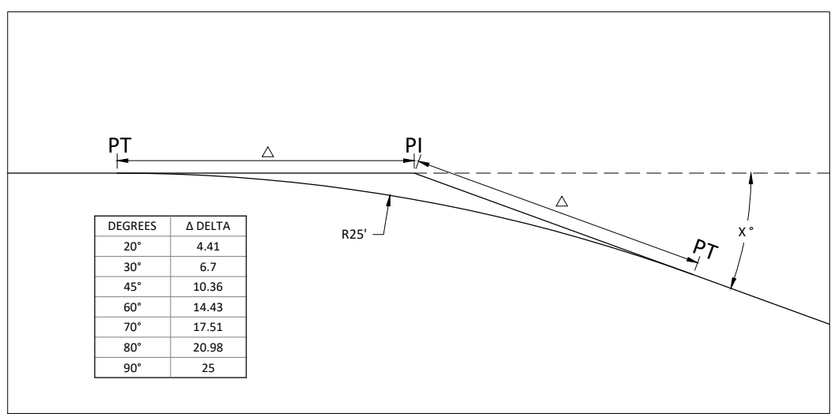

DEGREES	Δ DELTA
20°	4.41
30°	6.7
45°	10.36
60°	14.43
70°	17.51
80°	20.98
90°	25

THE CIRCULAR GROOVE SHALL BE A MINIMUM 0.35R DEEP AND SHALL MATCH THE OUTSIDE CURVE SHAPE OF THE DEFLECTED CPDT.

THE TRAPEZOIDAL GROOVE SHALL BE SHAPED AND ADJUSTED SUCH THAT POINTS A, B, & C WILL TOUCH THE UNDEFLECTED CPDT FOR EACH SIZE INSTALLED.

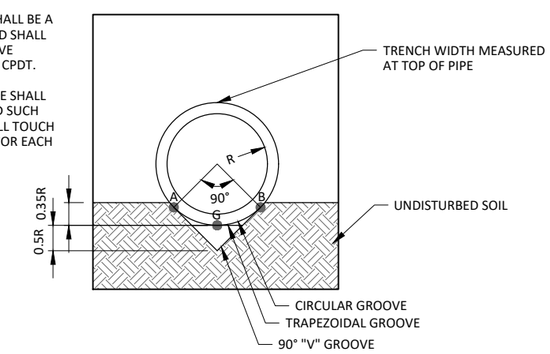

PREFFERED TRENCH INSTALLATION BOTTOM

TRAPEZOIDAL GROOVE, "V" GROOVE, & CIRCULAR GROOVE

NOT TO SCALE

SOURCE: ASTM F449

BOLTON & MENK
1519 BALTIMORE DRIVE
AMES, IOWA 50010
Phone: (515) 233-6100
Email: Ames@bolton-menk.com
www.bolton-menk.com

DESIGNED	TJB
DRAWN	TJB
CHECKED	JPR
CLIENT PROJ. NO.	07.131410

REV	DESCRIPTION	DATE

IDALS WATER RESOUCES BUREAU

HENDERSON - PROJECT NO. STO852118B

CPDT INSTALLATION

SHEET B.02

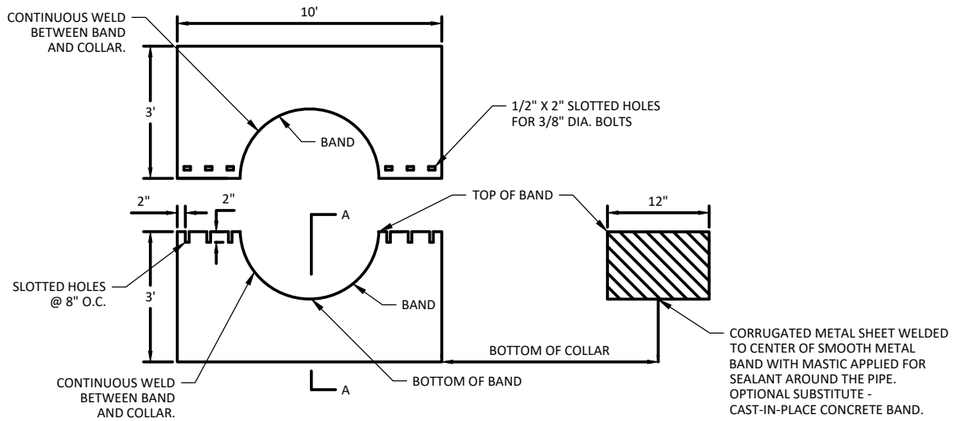

RCP ANTI-SEEP COLLAR

NOT TO SCALE

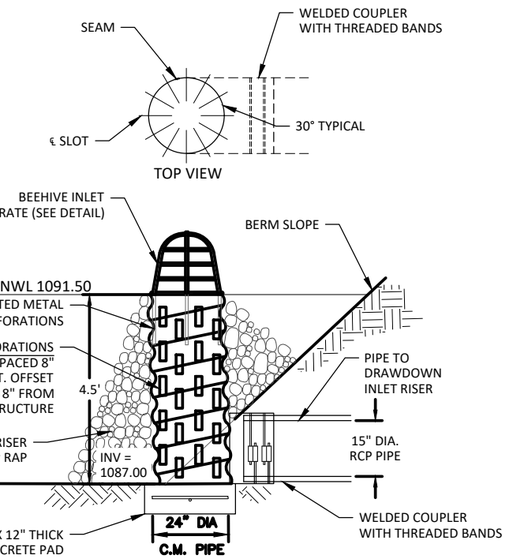

CMP RISER INLET STRUCTURE

NOT TO SCALE

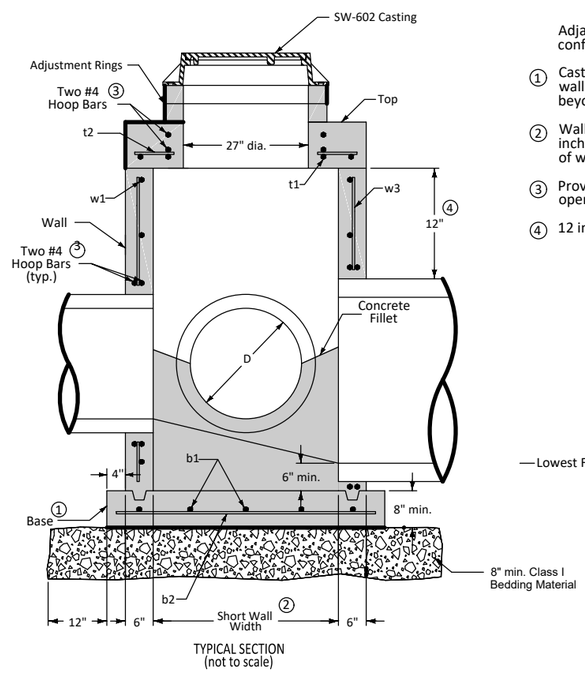

TYPICAL SECTION
(not to scale)

Adjacent walls may have different widths based upon pipe configuration, but structure must be rectangular.

① Cast-in-place base shown. If base is precast integral with walls, the footprint of the base is not required to extend beyond the outer edge of the walls.

② Wall widths vary with pipe diameter and range from 40 inches minimum to 77 inches maximum. Provide 6 inches of wall width (minimum) each side of pipe opening.

③ Provide two #4 hoop bars at top opening and at all pipe openings.

④ 12 inch minimum wall height above all pipes.

SW-402
SEE SHEET B.04 FOR MODIFICATIONS

SUDAS	Iowa Department of Transportation	REVISION NEW 04-21-09
FIGURE 6010.402	STANDARD ROAD PLAN	SW-402 SHEET 1 of 1
REVISIONS:		
SUDAS DIRECTOR	DESIGN METHODS ENGINEER	
RECTANGULAR STORM SEWER		

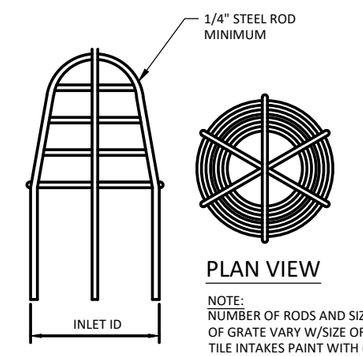

SECTION VIEW

PLAN VIEW

NOTE:
NUMBER OF RODS AND SIZE OF GRATE VARY W/SIZE OF TILE INTAKES PAINT WITH (2) COATS RUST INHIBITING PAINT FOLLOWING FABRICATION

BEEHIVE INLET GRATE (STEEL BARS)

NOT TO SCALE

BOLTON & MENK
1519 BALTIMORE DRIVE
AMES, IOWA 50010
Phone: (515) 233-6100
Email: Ames@bolton-menk.com
www.bolton-menk.com

DESIGNED	TJB
DRAWN	TJB
CHECKED	JPR
CLIENT PROJ. NO.	0T7.131410

REV	DESCRIPTION	DATE

IDALS WATER RESOUCES BUREAU
HENDERSON - PROJECT NO. STO852118B
IOWA DOT STRUCTURE & INLET RISER DETAILS

SHEET B.03

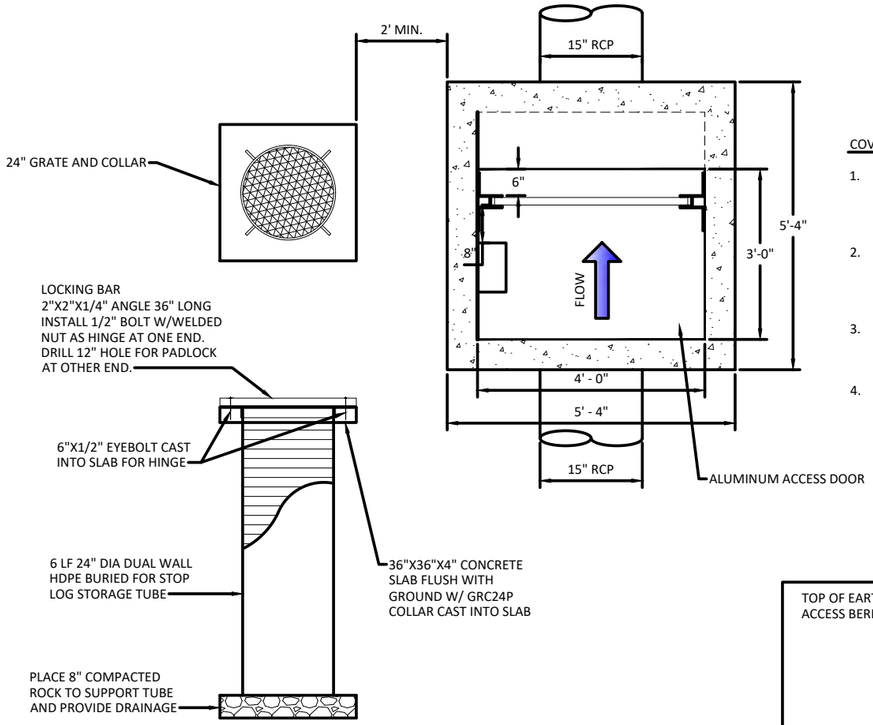

COVER AND STOP LOG STORAGE DETAIL

NOT TO SCALE

COVER/STOP LOG STORAGE NOTES:

1. PROVIDE (HALLIDAY PRODUCTS MODEL S1R3660 OR APPROVED EQUAL) 36" x 60" ALUMINUM ACCESS DOOR WITH LOCKING MECHANISM AND LIFTING HANDLE.
2. BOTH PADLOCKS FOR ACCESS DOOR AND STOP LOG STORAGE TUBE SHALL BE KEYED ALIKE. FOUR KEYS ARE TO BE SUPPLIED UPON PROJECT COMPLETION.
3. TOP OF STRUCTURE SHALL BE AN 8" THICK REINFORCED PRECAST TOP WITH ALUMINUM ACCESS DOOR CAST INTO TOP.
4. PROVIDE 24" GRATE AND COLLAR (AGRI DRAIN GR24 GRATE AND GRC24 COLLAR OR APPROVED EQUAL) FOR STOP LOG STORAGE.

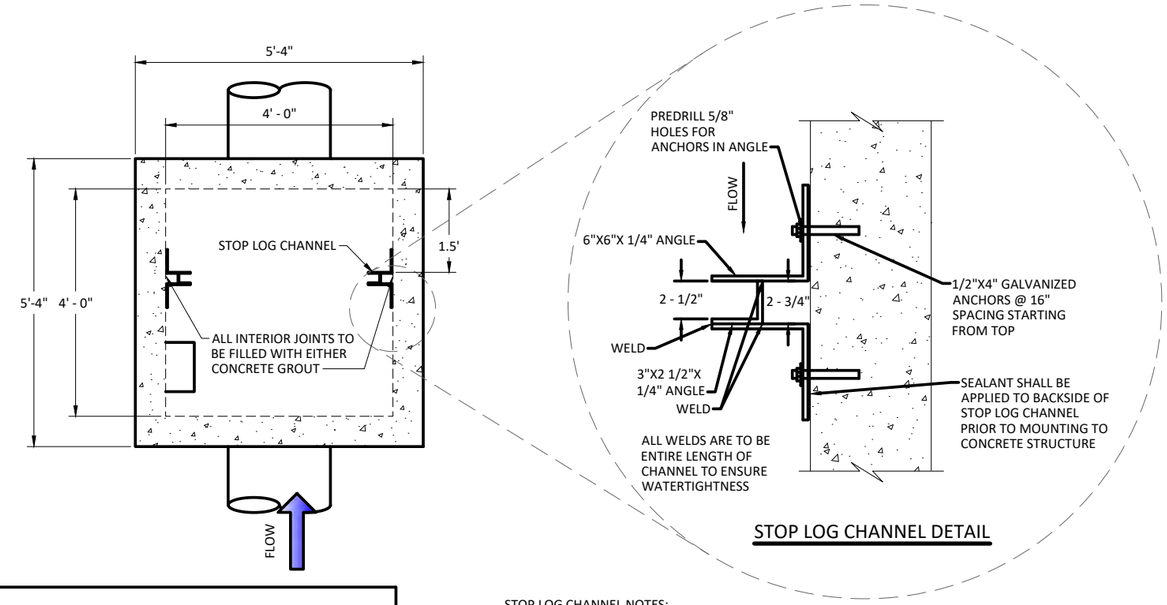

STOP LOG CHANNEL DETAIL

STOP LOG CHANNEL NOTES:

1. ALL STEEL SHALL BE FY=36 KSI.
2. ANCHORS SHALL BE GALVANIZED STEEL FURNISHED W/NUTS, WASHERS AND LOCK WASHERS.
3. STOP LOG CHANNEL SHALL BE FURNISHED AS ONE CONTINUOUS PIECE W/CONTINUOUS WELDS.
4. ALL STEEL STOP LOG CHANNEL COMPONENTS ARE TO BE GALVANIZED AFTER WELDING AND DRILLING IS COMPLETE.
5. CONTRACTOR IS TO APPLY SEALANT VERY GENEROUSLY TO BACKSIDE OF STOP LOG CHANNEL TO ENSURE WATERTIGHT SEAL. SEALANT SHALL BE SIKA 30 YEAR INDUSTRIAL CAULK IN LIMESTONE GREY OR APPROVED EQUIVALENT.

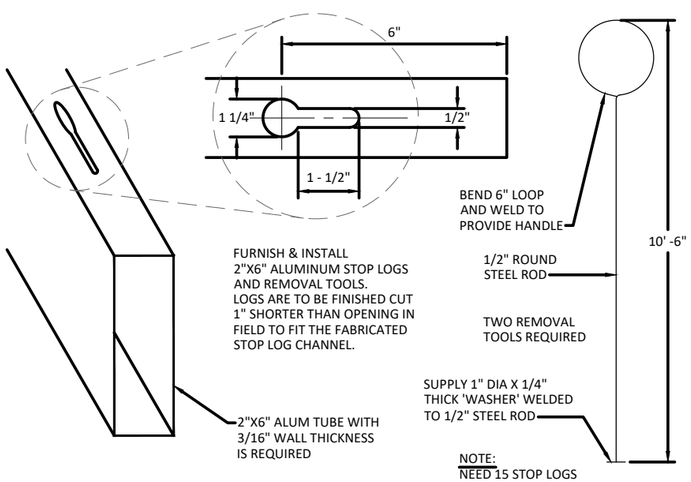

STOP LOG & REMOVAL TOOL DETAIL

NOT TO SCALE

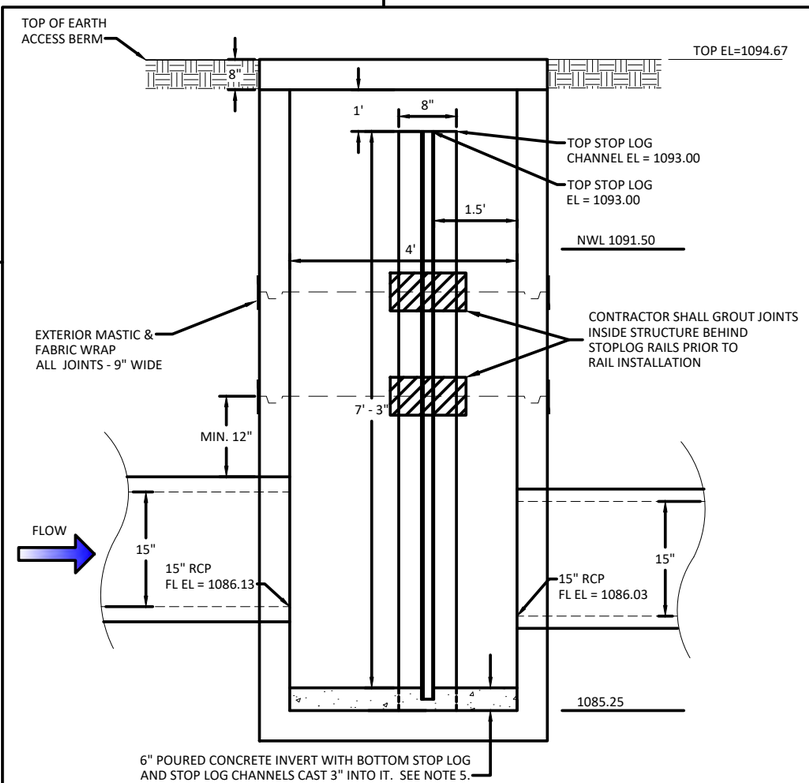

SW-402 WATER CONTROL OUTLET STRUCTURE ELEVATION

NOT TO SCALE

WATER CONTROL STRUCTURE NOTES:

1. STRUCTURE FABRICATION AND INSTALLATION SHALL CONFORM TO SUDAS 6010.302 SW-402 SANITARY MANHOLE
2. STRUCTURE SHOP DRAWINGS ARE REQUIRED FOR ENGINEER'S REVIEW AND APPROVAL BEFORE FABRICATION OF WATER CONTROL STRUCTURE.
3. PRECAST WATER CONTROL STRUCTURE SHALL BE SUPPLED IN 2 OR 3 SECTIONS, PLUS AN 8" THICK COVER SECTION. SECTION SIZE IS LEFT TO CONTRACTOR'S DISCRETION EXCEPT BOTTOM SECTION SHALL INCLUDE BASE AND WALLS TO 12" ABOVE INLET HOLE.
4. STOP LOG CHANNEL IS TO BE ANCHORED TO THE WALLS AND FLOOR PRIOR TO PLACING CONCRETE INVERT.
5. A CONCRETE INVERT IS TO BE INSTALLED AFTER STOP LOG CHANNEL IS INSTALLED. THE BOTTOM STOP LOG IS TO BE CAST INTO THE INVERT WITH THREE HALF INCH DIA. "J BOLTS" FASTENED TO THE BOTTOM STOP LOG. NO LIFTING HOLES ARE REQUIRED FOR THIS BOTTOM LOG.
6. ALL SECTIONS OF THE STRUCTURE ARE TO HAVE "TONGUE AND GROOVE" JOINTS SEALED WITH O RING GASKETS IN THE JOINT AND MASTIC AND FABRIC WRAP ON THE STRUCTURE EXTERIOR.
7. INTERIOR JOINTS SHALL BE FILLED AND SEALED TO PREVENT WATER FLOW IN JOINT BEHIND STOP LOG CHANNEL USING EITHER CONCRETE GROUT OR MASTIC.
8. ALL REINFORCEMENT FOR WATER CONTROL STRUCTURE SHALL BE ONE LAYER OF #4 REBAR @ 12" SPACING, CENTERED IN WALL, TWO #4 HOOP BARS ARE TO BE USED AT EACH OPENING.
9. PLACE BASE OF STRUCTURE ON FIRM UNDISTURBED EARTH FOUNDATION APPROVED BY ENGINEER.
10. A-LOK (OR EQUIVALENT) WATERTIGHT SEALS ARE REQUIRED FOR PIPE CONNECTIONS TO THE DRAWDOWN CONTROL STRUCTURE.
11. MANHOLE STEPS ARE TO BE INSTALLED FOR MAINTENANCE ACCESS TO THE STOP LOGS. STEPS ARE TO BE PER SUDAS SECTION 6010-2-2.13.
12. A-LOK'S (OR EQUIVATENT) WATERTIGHT SEALS ARE REQUIRED FOR PIPE CONNECTIONS TO THE WATER CONTROL STRUCTURE.
13. ENSURE THAT ALL JOINTS ARE WATER-TIGHT AND PROPERLY SEALED

BOLTON & MENK
1519 BALTIMORE DRIVE
AMES, IOWA 50010
Phone: (515) 233-6100
Email: Ames@bolton-menk.com
www.bolton-menk.com

DESIGNED	TJB
DRAWN	TJB
CHECKED	JPR
CLIENT PROJ. NO.	0T7.131410

REV	DESCRIPTION	DATE

IDALS WATER RESOUCES BUREAU

HENDERSON - PROJECT NO. STO852118B

STOPLOG STRUCTURE DETAILS

SHEET B.04

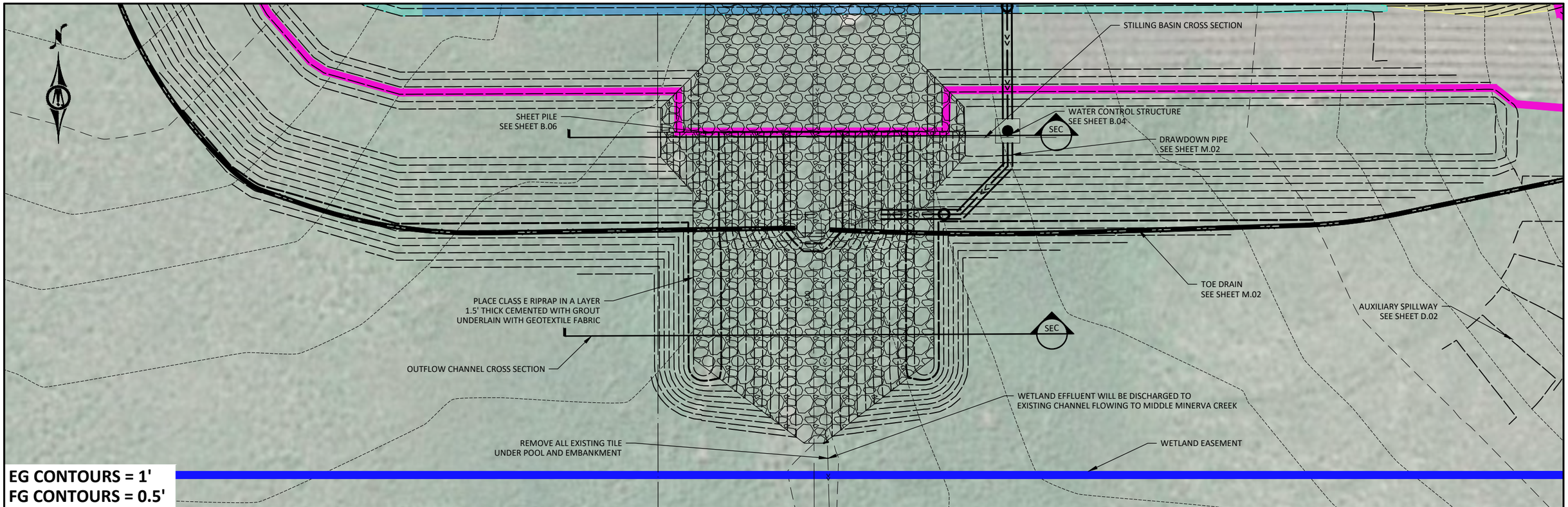

OUTFLOW CHANNEL CROSS SECTION

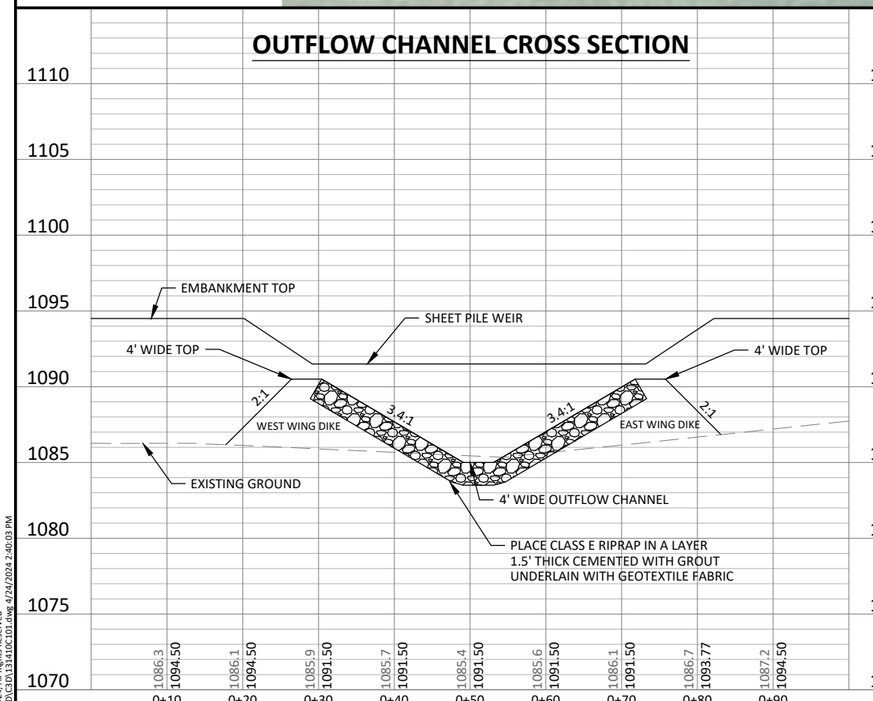

STILLING BASIN CROSS SECTION

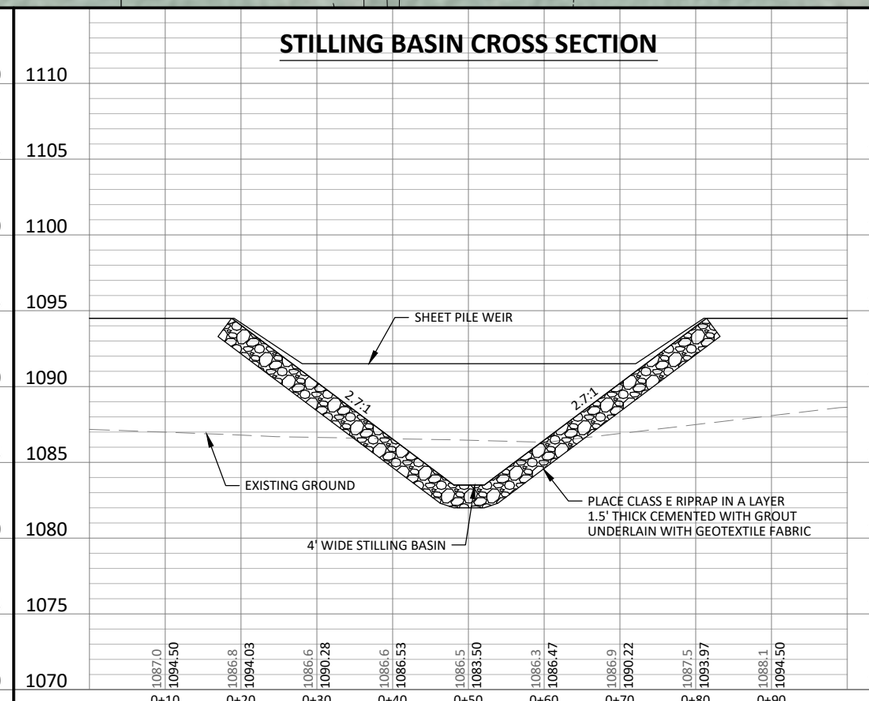

PRIMARY SPILLWAY PROFILE

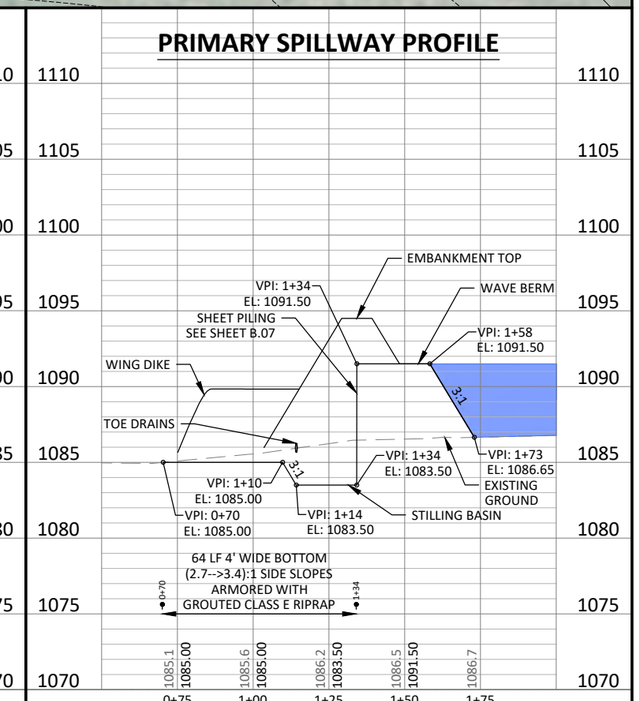

HORZ. 0 10 20 SCALE FEET
VERT. 0 5 10 SCALE FEET
HORZ. 0 25 50 SCALE FEET

BOLTON & MENK

1519 BALTIMORE DRIVE
AMES, IOWA 50010
Phone: (515) 233-6100
Email: Ames@bolton-menk.com
www.bolton-menk.com

DESIGNED	TJB
DRAWN	TJB
CHECKED	JPR
CLIENT PROJ. NO.	07.131410

REV	DESCRIPTION	DATE

IDALS WATER RESOUCES BUREAU
HENDERSON - PROJECT NO. STO852118B
STILLING BASIN DETAIL

SHEET B.05

DESIGN SHEET PILING AREA

SHEET PILING REQUIREMENTS

MINIMUM SECTION MODULUS OF 5.67 CUBIC INCHES PER FOOT OF WALL.
MINIMUM GRADE OF STEEL IS 25 KSI.
MINIMUM MOMENT OF INERTIA OF 15.53 INCHES ^ 4 PER FOOT OF WALL.
ALL SHEETING SHALL MEET ASTM A-328, A-572 GR50 OR A-690.

APPROVED PRODUCTS

SHORELINE STEEL SZ-10
JD FIELDS S64
GERDAU PZC 13
NUCOR SKYLINE SKS 11

OTHER SHEETING MAYBE ALLOWED WITH PRIOR APPROVAL OF ENGINEER. ALL MATERIALS ARE ESTIMATED AND FURTHER SIZING WILL NEED TO BE DONE.

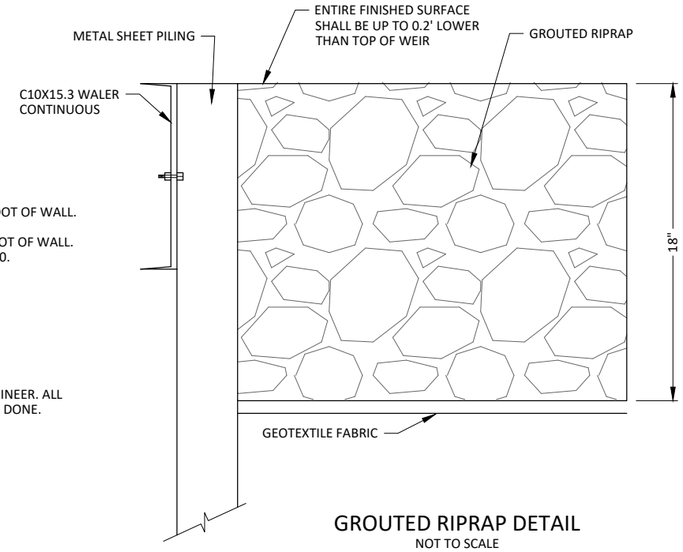

GROUTED RIPRAP DETAIL
NOT TO SCALE

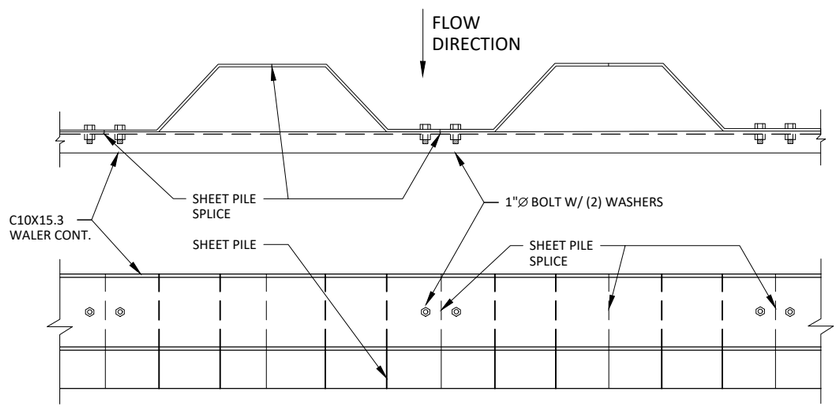

WALER BOLT PLACEMENT
NOT TO SCALE

NOTES:

1. ALL BOLTS WILL BE 1" DIA. WITH 2 WASHERS. BOLT SHALL BE EXTENDED AT A MINIMUM OF $\frac{3}{8}$" BEYOND THE NUT.
2. ALL HOLES SHALL BE DRILLED $\frac{1}{16}$" DIA. LARGER THAN THE BOLT.
3. THE WALER SHALL BE PLACED ON THE DOWNSTREAM SIDE OF THE WEIR.
4. ANY HOLES LEFT IN SHEET PILE (LIFTING HOLES ETC.) SHALL BE WELDED CLOSED.
5. AFTER SHEETING AND WALER INSTALLATION ALL SHEETING ON THE WEIR IS TO BE CUT TO CONFORM WITH 3:1 SLOPE AND THE DESIGN ELEVATIONS.
6. STRUCTURAL STEEL SHALL BE FABRICATED AND ERECTED IN ACCORDING WITH THE LATEST SPECIFICATION OF AISC. FABRICATOR SHALL SUBMIT SHOP DRAWINGS SHOWING THAT PLANNED STEEL WILL COMPLETELY COVER INTENDED WALL AREA. FABRICATE AFTER ENGINEERS REVIEW.
7. DEFLECTIONS SHALL BE MADE IN FABRICATED PIECES AND STILL CONFORM TO THE DIMENSIONS GIVEN.
8. IT IS THE CONTRACTOR'S RESPONSIBILITY TO DETERMINE ALLOWABLE CONSTRUCTION LIVE LOADS.
9. PROVIDE ALL NECESSARY TEMPORARY BRACING, SHORING, GUYING OR OTHER MEANS TO AVOID EXCESSIVE STRESSES AND TO HOLD STRUCTURAL ELEMENTS IN PLACE DURING CONSTRUCTION.

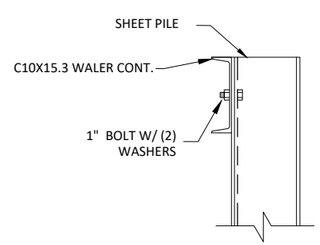

NOTE: 1 BOLT TO BE PLACED ON EACH SIDE OF SPLICE

BOLT DETAIL
NOT TO SCALE

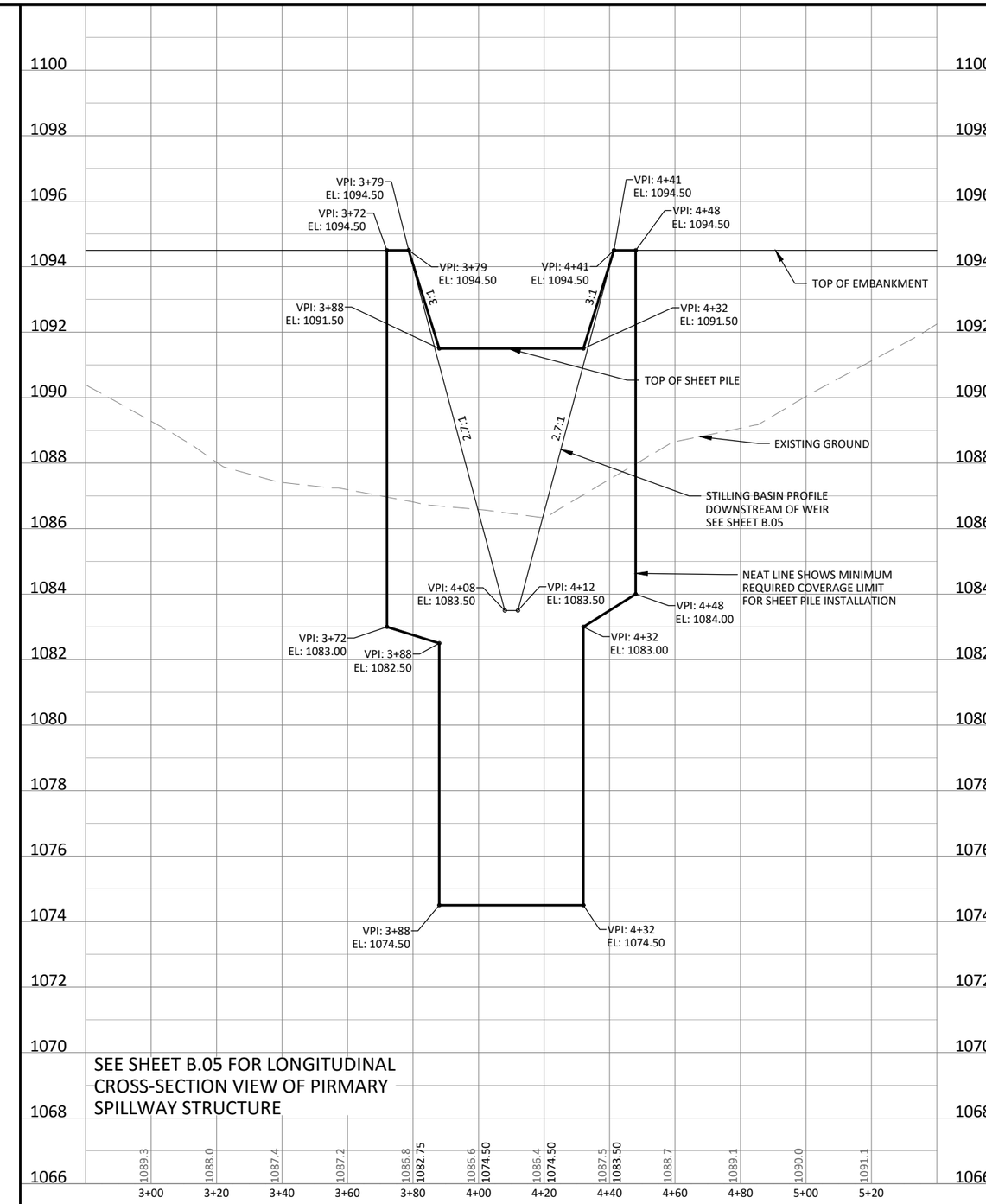

SEE SHEET B.05 FOR LONGITUDINAL CROSS-SECTION VIEW OF PIRMARY SPILLWAY STRUCTURE

HORZ. SCALE 0 20 40 FEET

BOLTON & MENK
1519 BALTIMORE DRIVE
AMES, IOWA 50010
Phone: (515) 233-6100
Email: Ames@bolton-menk.com
www.bolton-menk.com

DESIGNED TJB	REV	DESCRIPTION	DATE
DRAWN TJB			
CHECKED JPR			
CLIENT PROJ. NO. 017.131410			

IDALS WATER RESOUCES BUREAU
HENDERSON - PROJECT NO. STO852118B
SHEET PILE DETAIL

SHEET B.06

ALL 3.5 ACRES IN ORANGE AND 0.8 ACRES IN GREEN ARE TO BE SEEDED
SEED BED PREPARATION AND SEED MIX WILL FOLLOW IA-CS SPECIFICATIONS

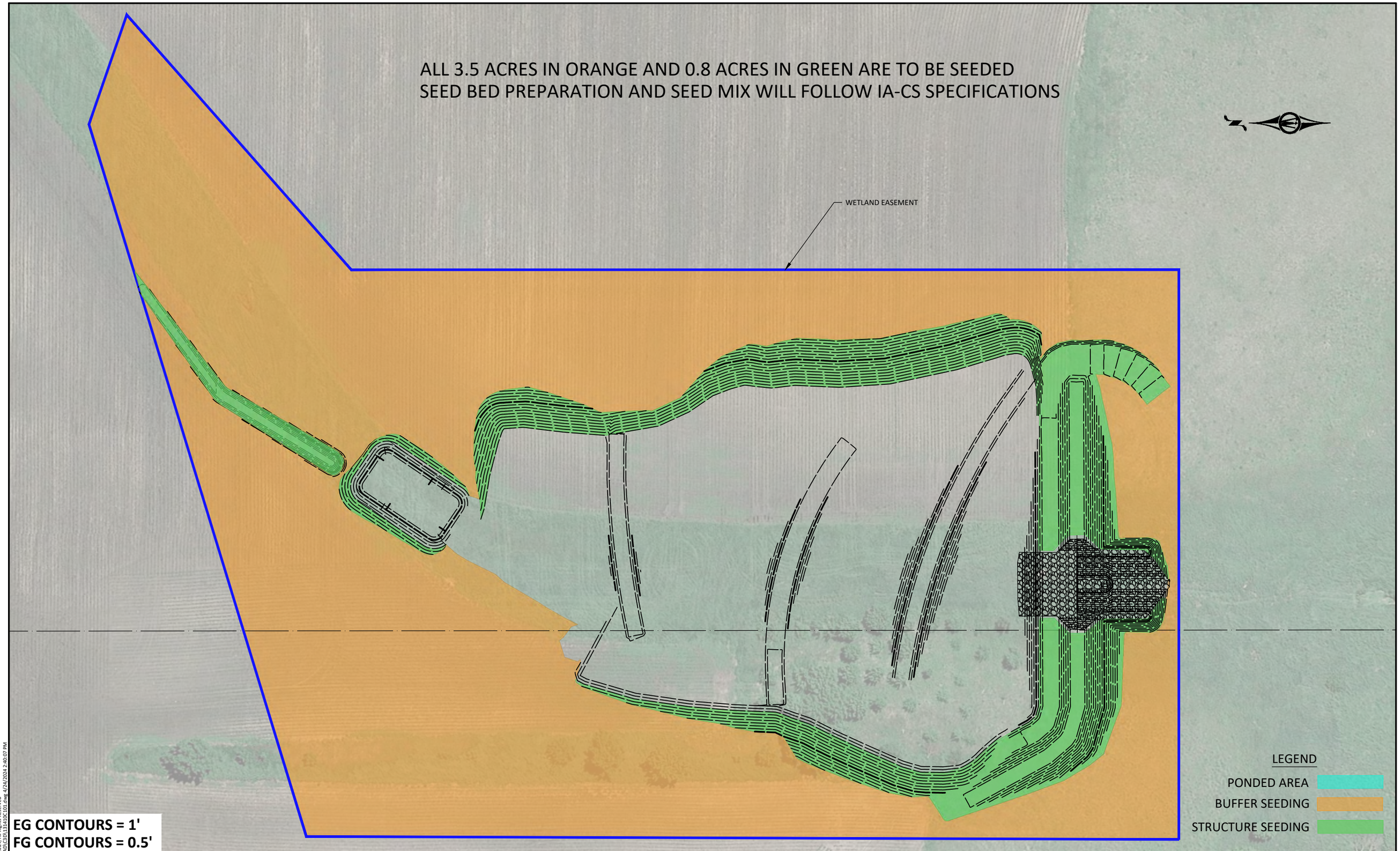

EG CONTOURS = 1'
FG CONTOURS = 0.5'

HORZ. 0 30 60
SCALE FEET

BOLTON & MENK
1519 BALTIMORE DRIVE
AMES, IOWA 50010
Phone: (515) 233-6100
Email: Ames@bolton-menk.com
www.bolton-menk.com

DESIGNED	TJB
DRAWN	TJB
CHECKED	JPR
CLIENT PROJ. NO.	0T7.131410

REV	DESCRIPTION	DATE

IDALS WATER RESOUCES BUREAU
HENDERSON - PROJECT NO. STO852118B
SEEDING MAP

SHEET
B.07

QUANTITY ESTIMATE - HENDERSON

PROJECT: STO852118B

CREP: **WQI:** x

BID ITEM	SUB-ITEM	DESCRIPTION	SPECIFICATIONS	PAGE	PLAN SHEETS	ESTIMATED QUANTITIES	UNITS
1	-	SITE STRIPPING & PREPARATION	IA CS-001	3-4	A.01, A.03, A.04	1	LS
2	-	TOPSOILING	IA CS-026	33-34	A.02, D.01-D.04, M.01	1800	CY
3	-	CLEARING AND GRUBBING	IA CS-001	3-4	A.02	1	LS
4	-	DRAIN TILE INVESTIGATION AND REMOVAL	IA CS-009	15-18	A.04, B.05	24	HR
5	-	REINFORCED CONCRETE PIPE (15" DIA. GASKETED)	IA CS-031 4020-1.08-A	35-41	B.01, M.02	81	LF
6	-	REINFORCED CONCRETE PIPE APRON (15" DIA.)	IA CS-031 4030-1.08-B	35-41	B.01, M.02	1	EA
7	-	CORRUGATED METAL PIPE INLET RISER (24" DIA.)	IA CS-051	46-50	B.03, M.02	1	LS
8	-	SW-402 (MODIFIED WATER CONTROL STRUCTURE, 48" X 48")	IA CS-031 4030-1.08-A	35-41	B.04, M.02	1	EA
9	-	*EARTHFILL (DAM CORE)	IA CS-023	26-29	A.04, D.01	1270	CY
10	-	*EARTHFILL	IA CS-023	26-29	A.04, D.01-D.04	3130	CY
11	-	STEEL SHEET PILE	IA CS-013	21-22	B.06	1086	SF
12	-	GEOTEXTILE FABRIC	IA CS-095	56-59	B.05	700	SY
13	-	RIPRAP (CLASS E)	IA CS-061	51-52	B.05	500	TN
14	-	RIPRAP (CLASS D)	IA CS-061	51-52	A.04	50	TN
15	-	GROUT	IA CS-062	53-55	B.05	120	CY
16	-	DUAL-WALL PLASTIC PIPE (15" DIA. NON-PERFORATED)	IA CS-046	42-45	A.04, M.01	708	LF
17	-	SINGLE-WALL PLASTIC PIPE (6" DIA. PERFORATED)	IA CS-046	42-45	A.04, M.02	398	LF
18	-	CORRUGATED METAL PIPE (18" DIA.)	IA CS-051	46-50	M.01	20	LF
19	-	CORRUGATED METAL PIPE (8" DIA.)	IA CS-051	46-50	M.02	40	LF
20	-	TILE CONNECTIONS 12" DIA. OR LARGER	IA CS-046	42-45	M.01	2	EA
21	-	TILE CONNECTIONS 10" DIA. OR SMALLER	IA CS-046	42-45	M.01	5	EA
22	-	DRAINFILL	IA CS-024	30-32	B.02, M.02	100	TN
23	-	BUFFER SEEDING	IA CS-006	8-11	B.07	3.5	AC
24	-	STRUCTURE AND WATERWAY/CHANNEL SEEDING	IA CS-006	8-11	B.07	0.8	AC
25	-	SILT FENCE INSTALLATION AND REMOVAL	IA CS-005	5-7		500	LF
26	-	CROP DAMAGE	IA CS-001	3-4			AC
27	-	MOBILIZATION	IA CS-008	12-14		1	LS

* QUANTITY INCLUDES 35% SHRINK

ESTIMATE REFERENCE INFORMATION

ITEM NO.	DESCRIPTION
1	SITE STRIPPING & PREPARATION
2	TOPSOILING
	STOCKPILE WITHIN THE EASEMENT USING SILT FENCING TO PREVENT EROSION IF NECESSARY.
3	CLEARING AND GRUBBING
4	DRAIN TILE INVESTIGATION AND REMOVAL
	MATERIAL COSTS FOR ITEMS NEEDED TO MAKE REPAIRS WILL BE NEGOTIATED AS EXTRA WORK.
5	REINFORCED CONCRETE PIPE (15" DIA. GASKETED)
	SEE SHEET B.01 FOR INSTALLATION AND FIELD TILE CONNECTION DETAILS.
6	REINFORCED CONCRETE PIPE APRON (15" DIA.)
	INSTALL FLUSH WITH THE BANK OF THE STILLING BASIN AND ENCASE WITHIN THE RIPRAP AND GROUT.
7	CORRUGATED METAL PIPE INLET RISER (24" DIA.)
	SEE SHEET B.03 FOR DETAILS. INCLUDES APPROXIMATELY 7 TONS OF CLASS D RIPRAP.
8	SW-402 (MODIFIED WATER CONTROL STRUCTURE, 48" X 48")
	SEE SHEET B.04 FOR DETAILS.
9	*EARTHFILL (DAM CORE)
10	*EARTHFILL
	ALL EARTHFILL EXCEPT FOR THE DAM CORE.
11	STEEL SHEET PILE
	SEE SHEET B.06 FOR DETAILS.
12	GEOTEXTILE FABRIC
	SEE SHEET B.05 FOR DETAILS.
13	RIPRAP (CLASS E)
	SEE SHEET B.05 FOR DETAILS.
14	RIPRAP (CLASS D)
	TO BE USED IF NECESSARY IN THE DOWNSTREAM CHANNEL OR FOR EROSION PROTECTION UNDERNEATH TILE OUTLETS.
15	GROUT
16	DUAL-WALL PLASTIC PIPE (15" DIA. NON-PERFORATED)
	SEE SHEET B.02 FOR INSTALLATION DETAILS AND SHEET B.01 FOR FIELD TILE CONNECTION DETAILS.
17	SINGLE-WALL PLASTIC PIPE (6" DIA. PERFORATED)
	SEE SHEET B.02 FOR INSTALLATION DETAILS.
18	CORRUGATED METAL PIPE (18" DIA.)
19	CORRUGATED METAL PIPE (8" DIA.)
	INSTALL FLUSH WITH THE BANKS OF THE STILLING BASIN AND ENCASE WITHIN THE RIPRAP AND GROUT.
20	TILE CONNECTIONS 12" DIA. OR LARGER
	INCLUDES THE MAIN TILE DIVERSION CONNECTION.
21	TILE CONNECTIONS 10" DIA. OR SMALLER
	SEE SHEET B.01 FOR DETAILS.
22	DRAINFILL
	SEE SHEET B.02 FOR DETAILS.
23	BUFFER SEEDING
	SEE SHEET B.07 FOR DETAILS.
24	STRUCTURE AND WATERWAY/CHANNEL SEEDING
	SEE SHEET B.07 FOR DETAILS.
25	SILT FENCE INSTALLATION AND REMOVAL
	TO BE PLACED IF NEEDED.
26	CROP DAMAGE
27	MOBILIZATION

BOLTON & MENK
1519 BALTIMORE DRIVE
AMES, IOWA 50010
Phone: (515) 233-6100
Email: Ames@bolton-menk.com
www.bolton-menk.com

DESIGNED TJB
DRAWN TJB
CHECKED JPR
CLIENT PROJ. NO. 0T7.131410

REV	DESCRIPTION	DATE

IDALS WATER RESOUCES BUREAU
HENDERSON - PROJECT NO. STO852118B
ESTIMATED QUANTITIES & REFERENCE NOTES

SHEET C.01

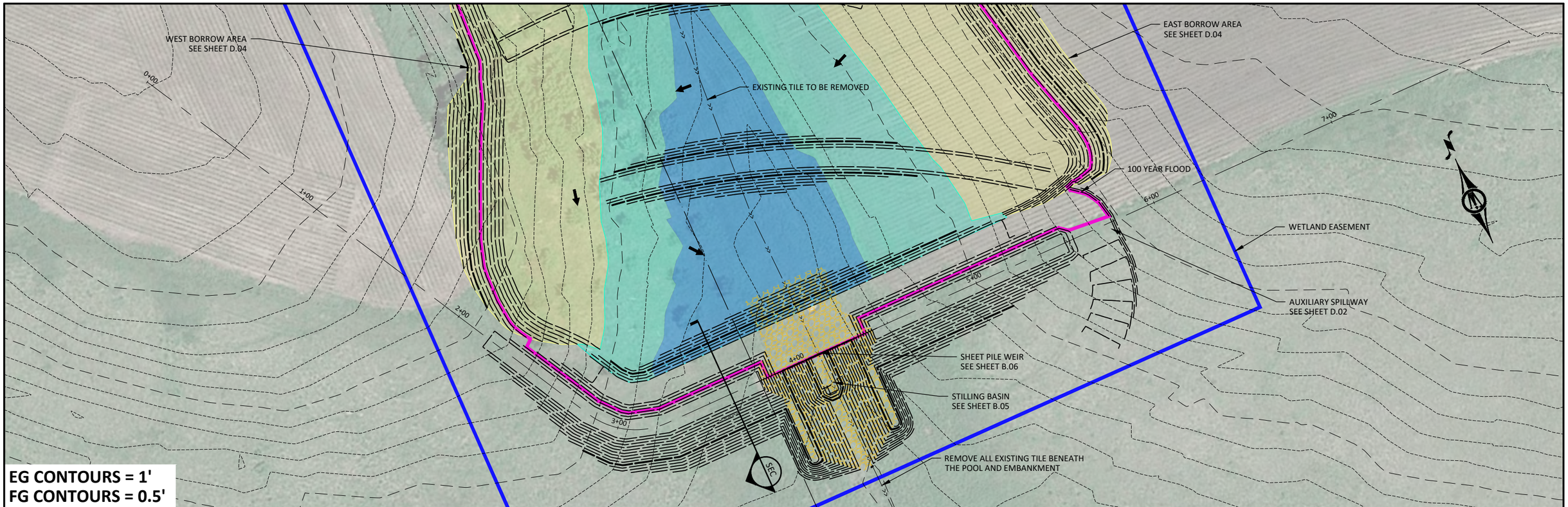

TYPICAL SECTION

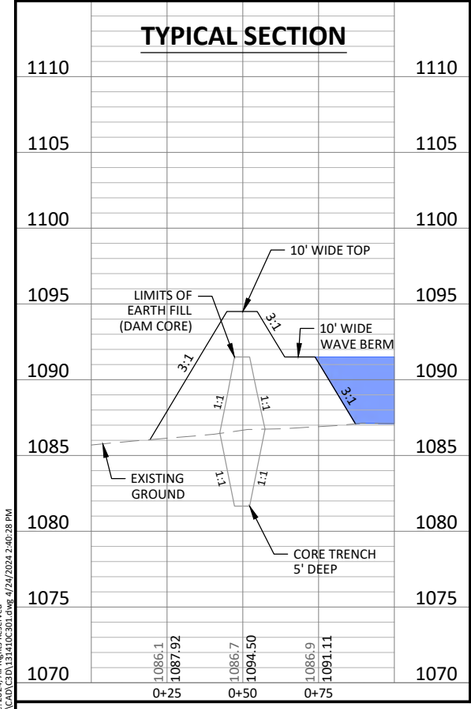

EMBANKMENT PROFILE

GRADE SHOWN BELOW IS FINAL GRADE POST SETTLEMENT. EMBANKMENT TOP SHALL BE CONSTRUCTED APPROXIMATELY 0.35' HIGHER THAN SHOWN TO ALLOW FOR SOIL SETTLEMENT.

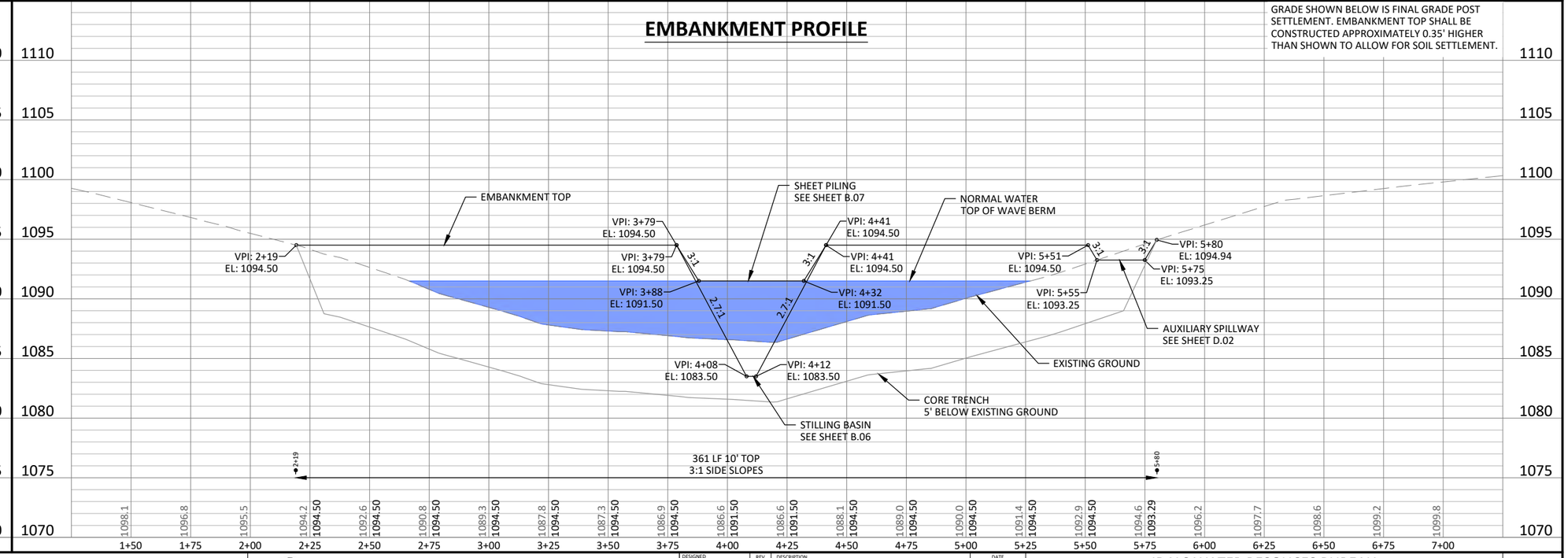

HORZ. 0 25 50 SCALE FEET

VERT. 0 5 10 SCALE FEET

BOLTON & MENK
1519 BALTIMORE DRIVE
AMES, IOWA 50010
Phone: (515) 233-6100
Email: Ames@bolton-menk.com
www.bolton-menk.com

DESIGNED	TJB
DRAWN	TJB
CHECKED	JPR
CLIENT PROJ. NO.	017.131410

REV	DESCRIPTION	DATE

IDALS WATER RESOUCES BUREAU

HENDERSON - PROJECT NO. STO852118B

PLAN & PROFILE - EMBANKMENT

SHEET D.01

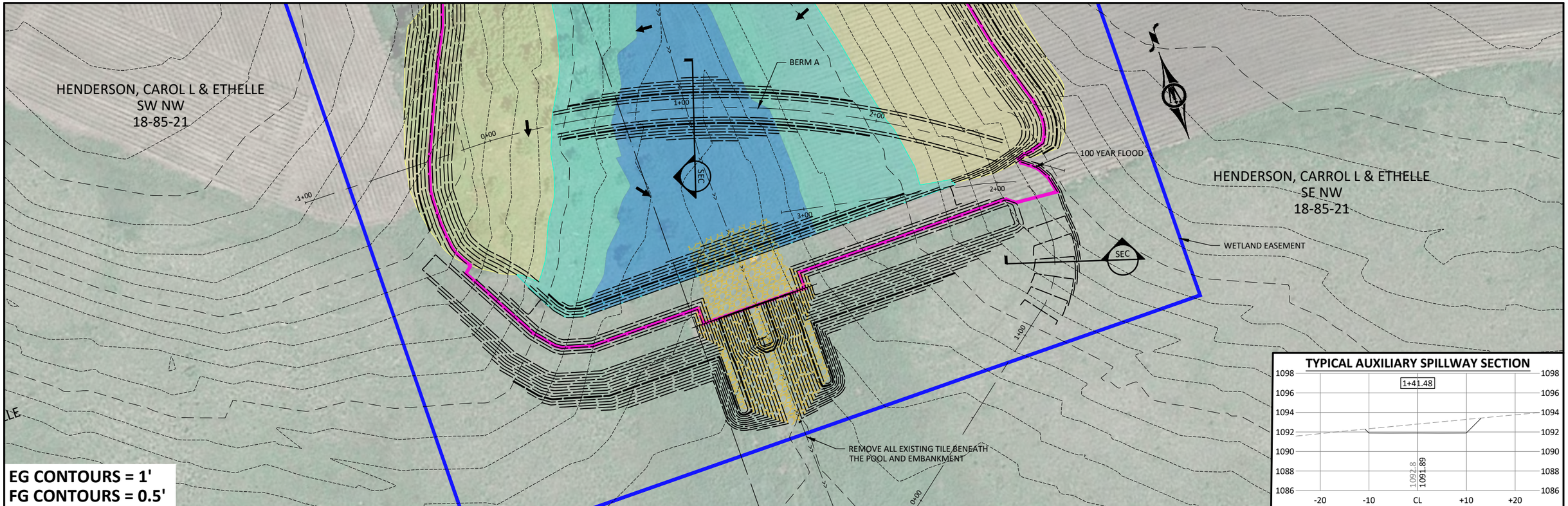

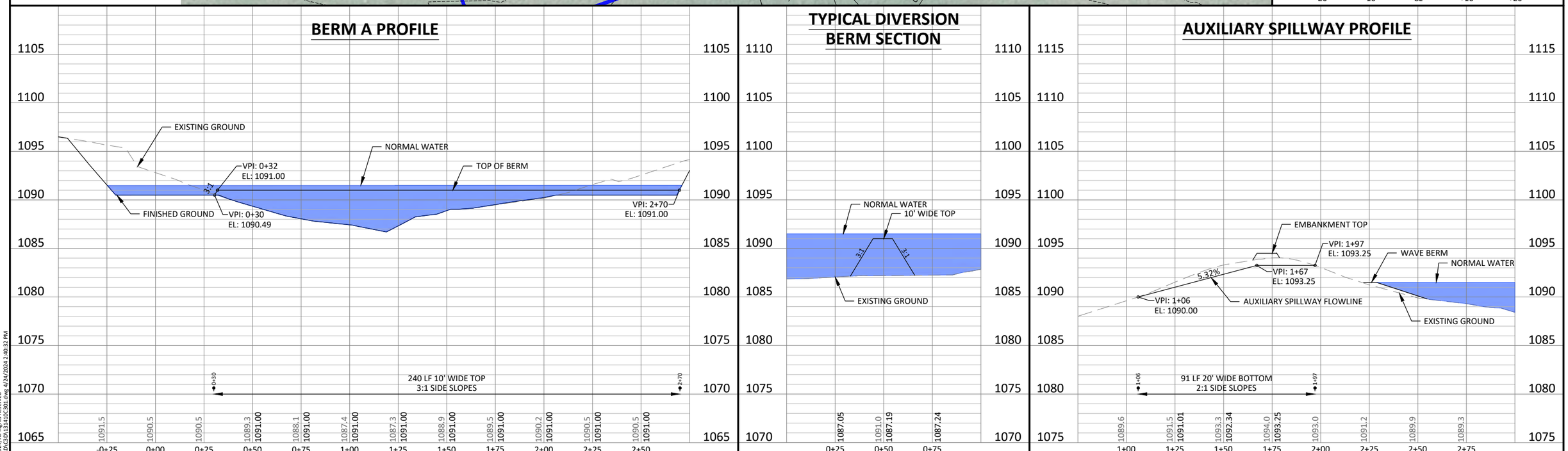

HORZ. 0 25 50 SCALE FEET
VERT. 0 5 10 SCALE FEET

BOLTON & MENK

1519 BALTIMORE DRIVE
AMES, IOWA 50010
Phone: (515) 233-6100
Email: Ames@bolton-menk.com
www.bolton-menk.com

DESIGNED	TJB
DRAWN	TJB
CHECKED	JPR
CLIENT PROJ. NO.	0T7.131410

REV	DESCRIPTION	DATE

IDALS WATER RESOUCES BUREAU
HENDERSON - PROJECT NO. STO852118B
PLAN & PROFILE - BERM A & AUXILIARY SPILLWAY

SHEET D.02

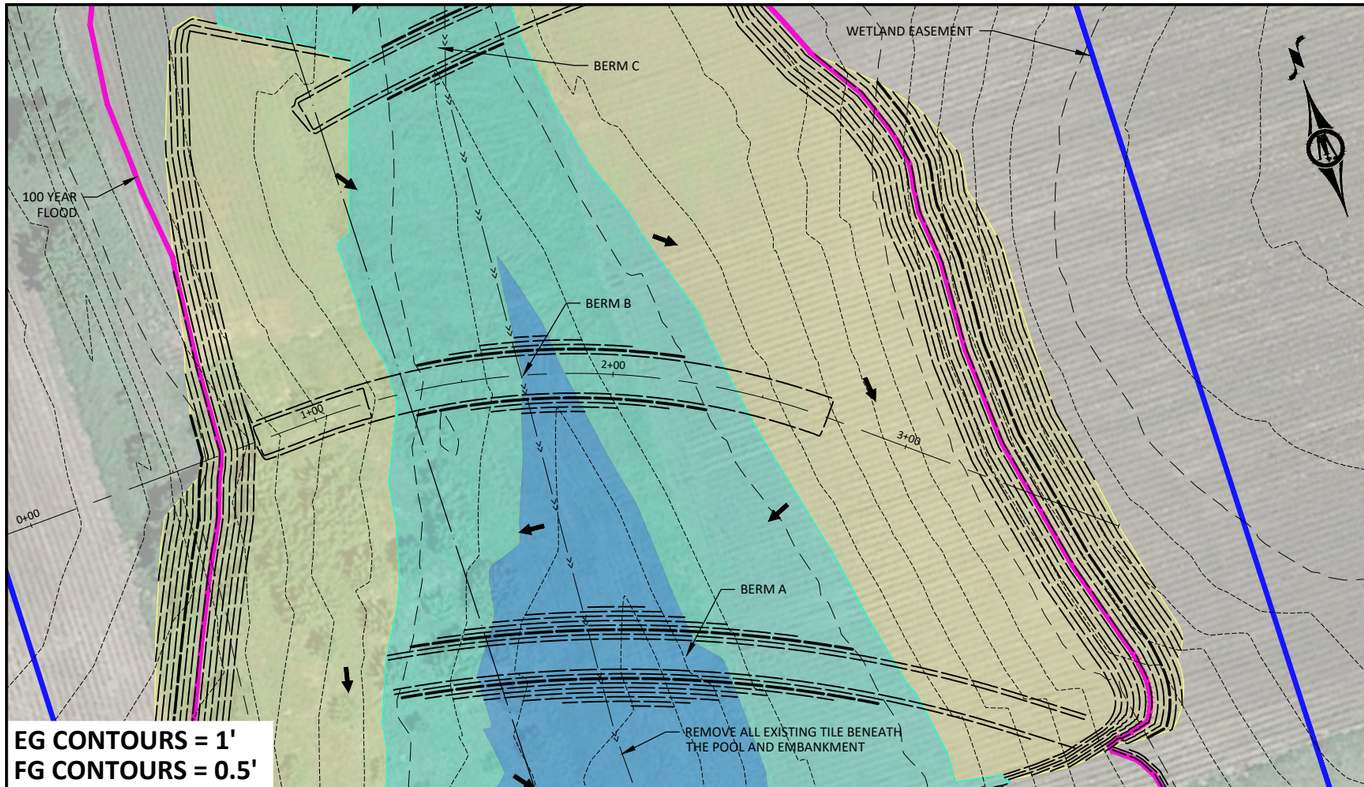

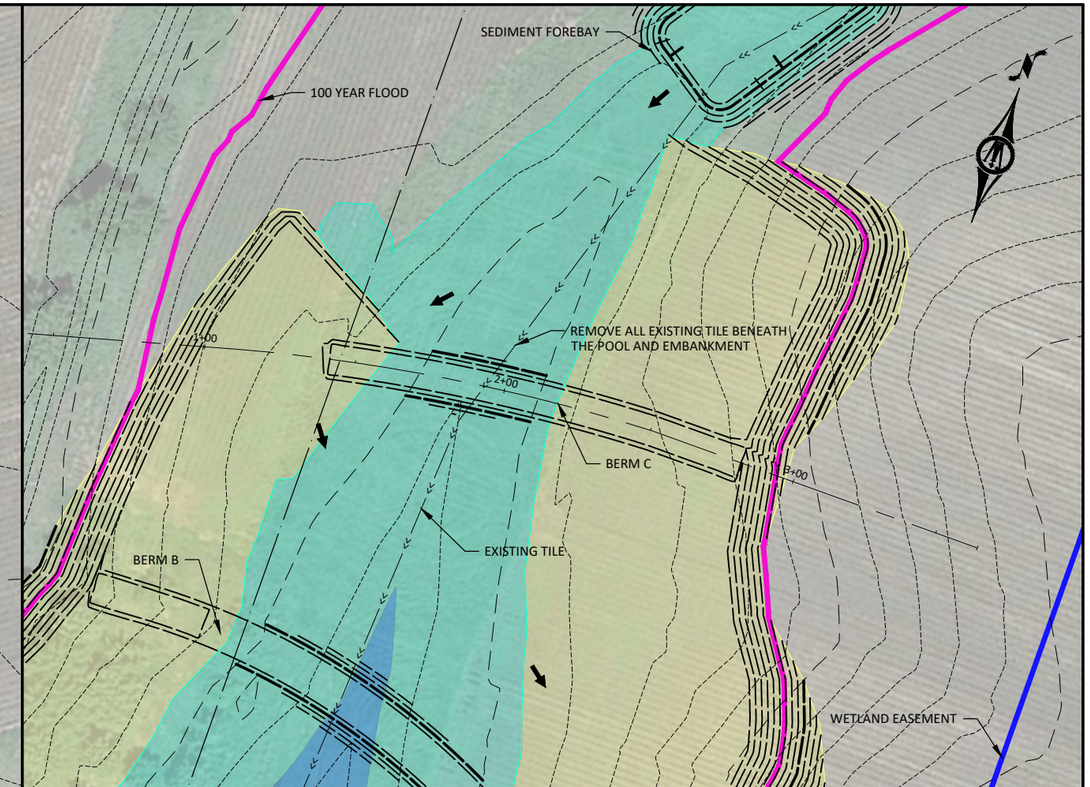

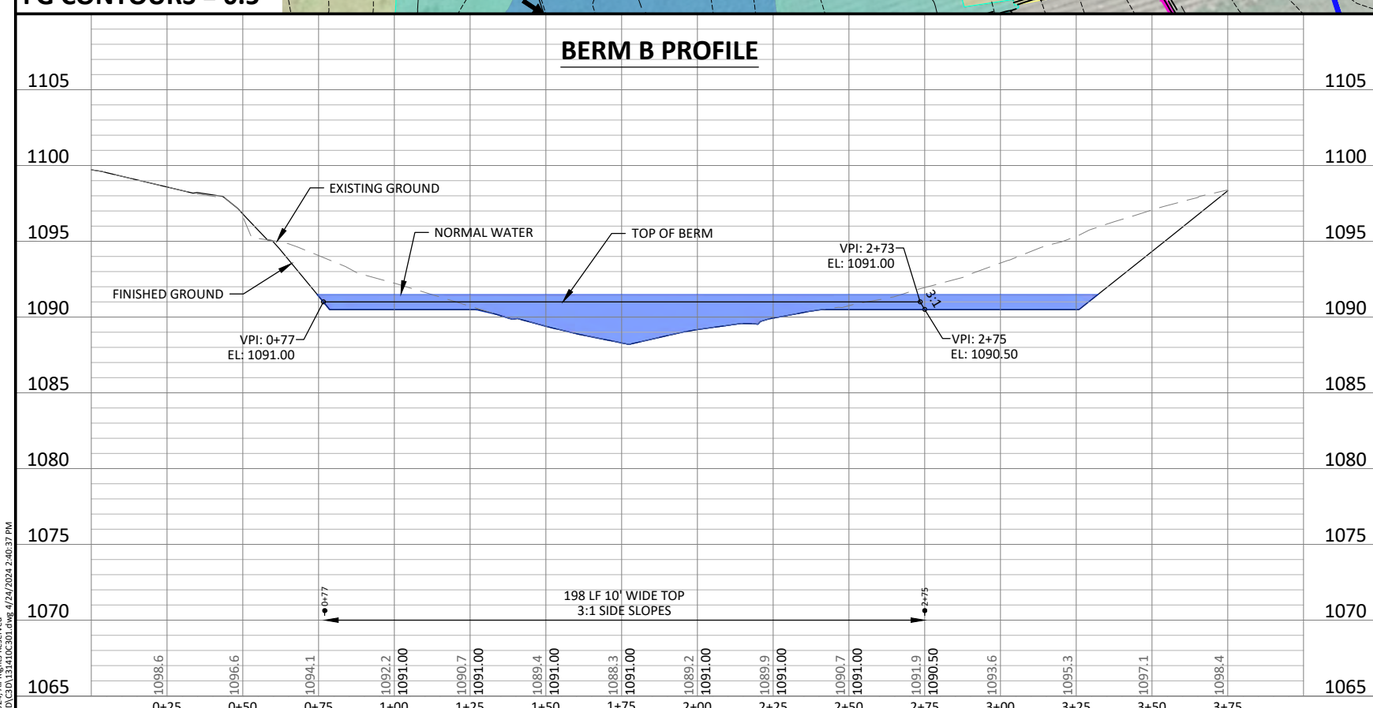

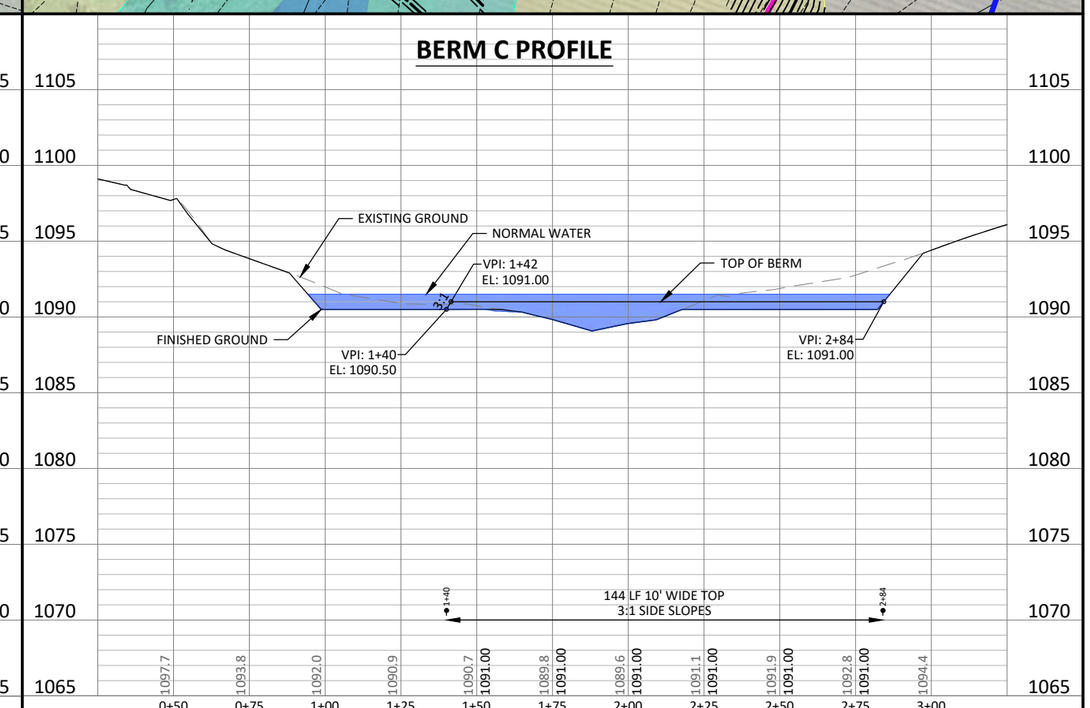

HORZ. 0 25 50 SCALE FEET

VERT. 0 5 10 SCALE FEET

BOLTON & MENK

1519 BALTIMORE DRIVE
AMES, IOWA 50010
Phone: (515) 233-6100
Email: Ames@bolton-menk.com
www.bolton-menk.com

DESIGNED	TJB
DRAWN	TJB
CHECKED	JPR
CLIENT PROJ. NO.	07.131410

REV	DESCRIPTION	DATE

IDALS WATER RESOUCES BUREAU

HENDERSON - PROJECT NO. STO852118B

PLAN & PROFILE - BERM B & BERM C

SHEET D.03

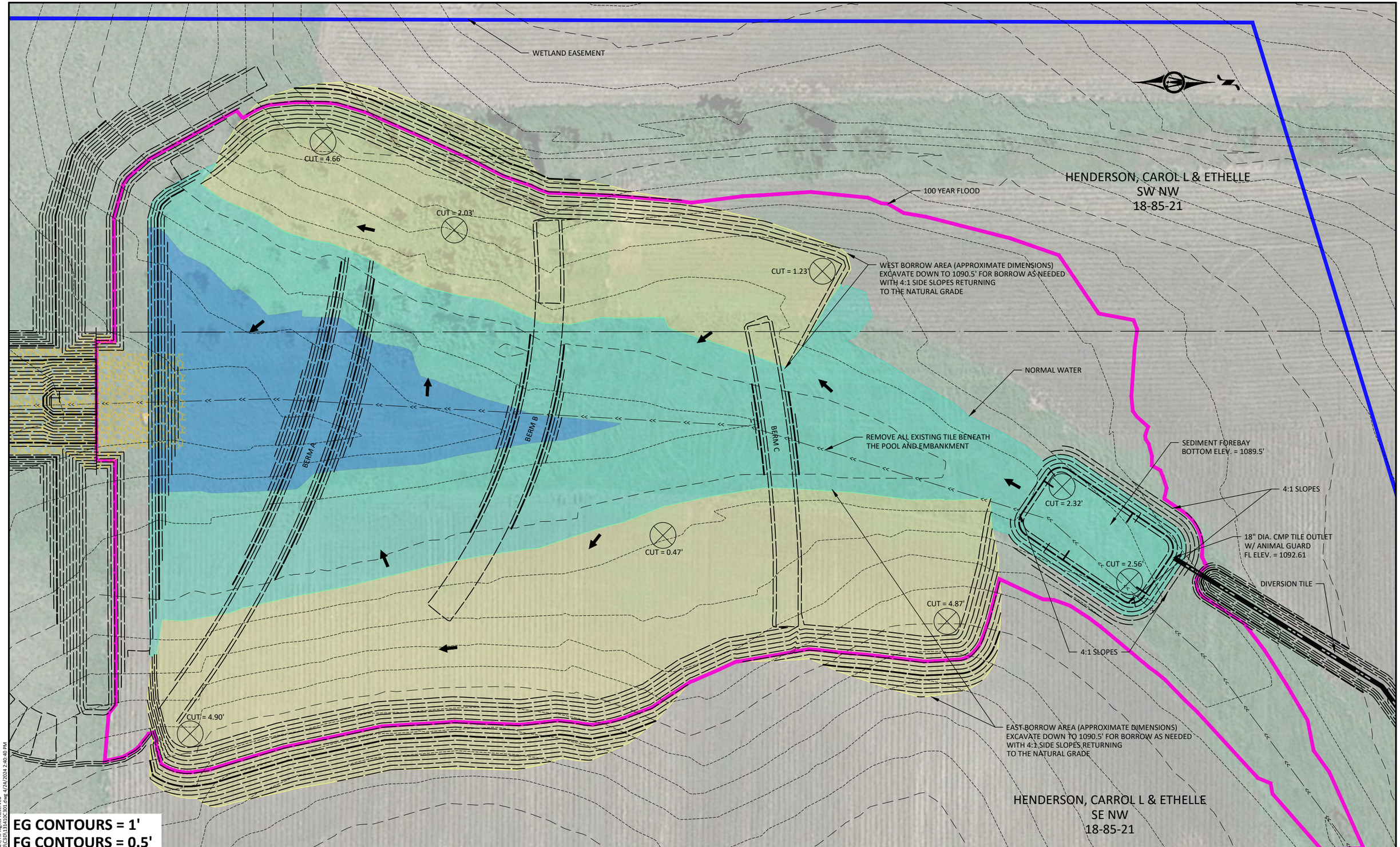

HORZ. 0 20 40
SCALE FEET

BOLTON & MENK

1519 BALTIMORE DRIVE
AMES, IOWA 50010
Phone: (515) 233-6100
Email: Ames@bolton-menk.com
www.bolton-menk.com

DESIGNED	TJB
DRAWN	TJB
CHECKED	JPR
CLIENT PROJ. NO.	OT7.131410

REV	DESCRIPTION	DATE

IDALS WATER RESOUCES BUREAU

HENDERSON - PROJECT NO. STO852118B

SEDIMENT FOREBAY & POND EXPANSION

SHEET D.04

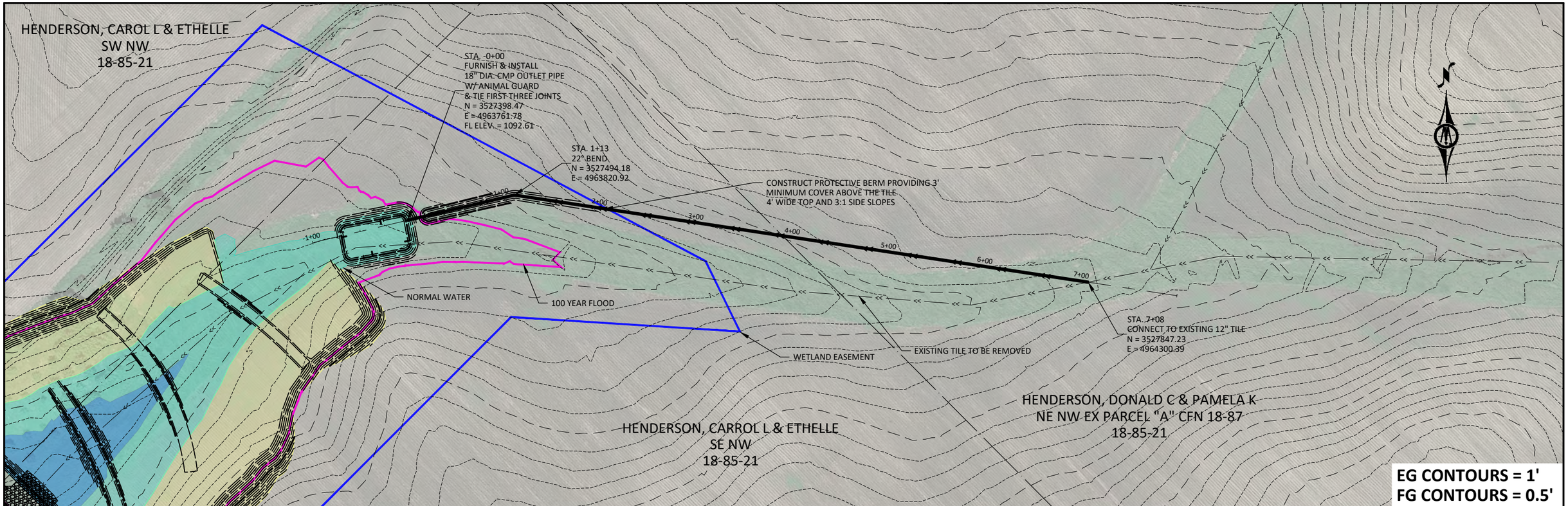

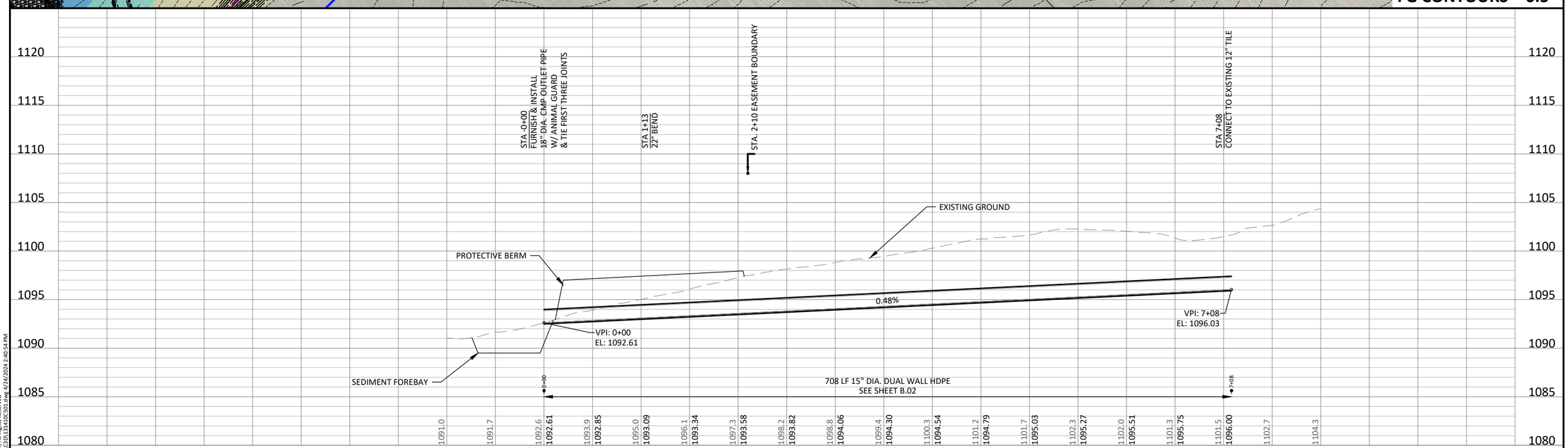

HORZ. 0 50 100 SCALE FEET

VERT. 0 5 10 SCALE FEET

BOLTON & MENK
1519 BALTIMORE DRIVE
AMES, IOWA 50010
Phone: (515) 233-6100
Email: Ames@bolton-menk.com
www.bolton-menk.com

DESIGNED	TJB
DRAWN	TJB
CHECKED	JPR
CLIENT PROJ. NO.	0T7.131410

REV	DESCRIPTION	DATE

IDALS WATER RESOUCES BUREAU

HENDERSON - PROJECT NO. STO852118B

PLAN & PROFILE - TILE DIVERSION

SHEET M.01

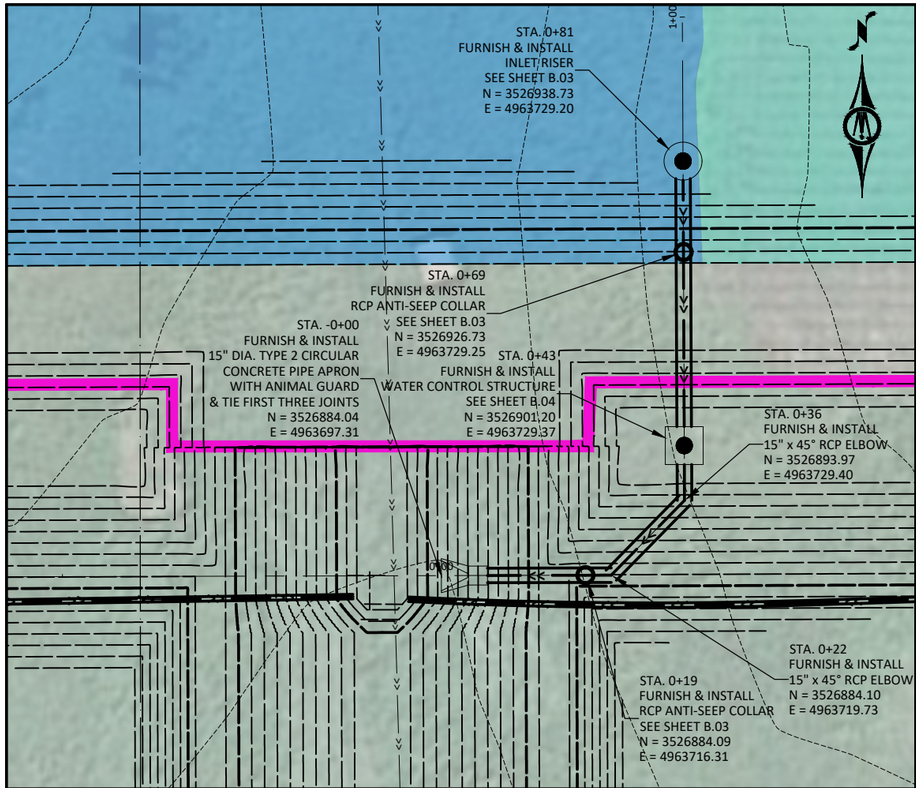

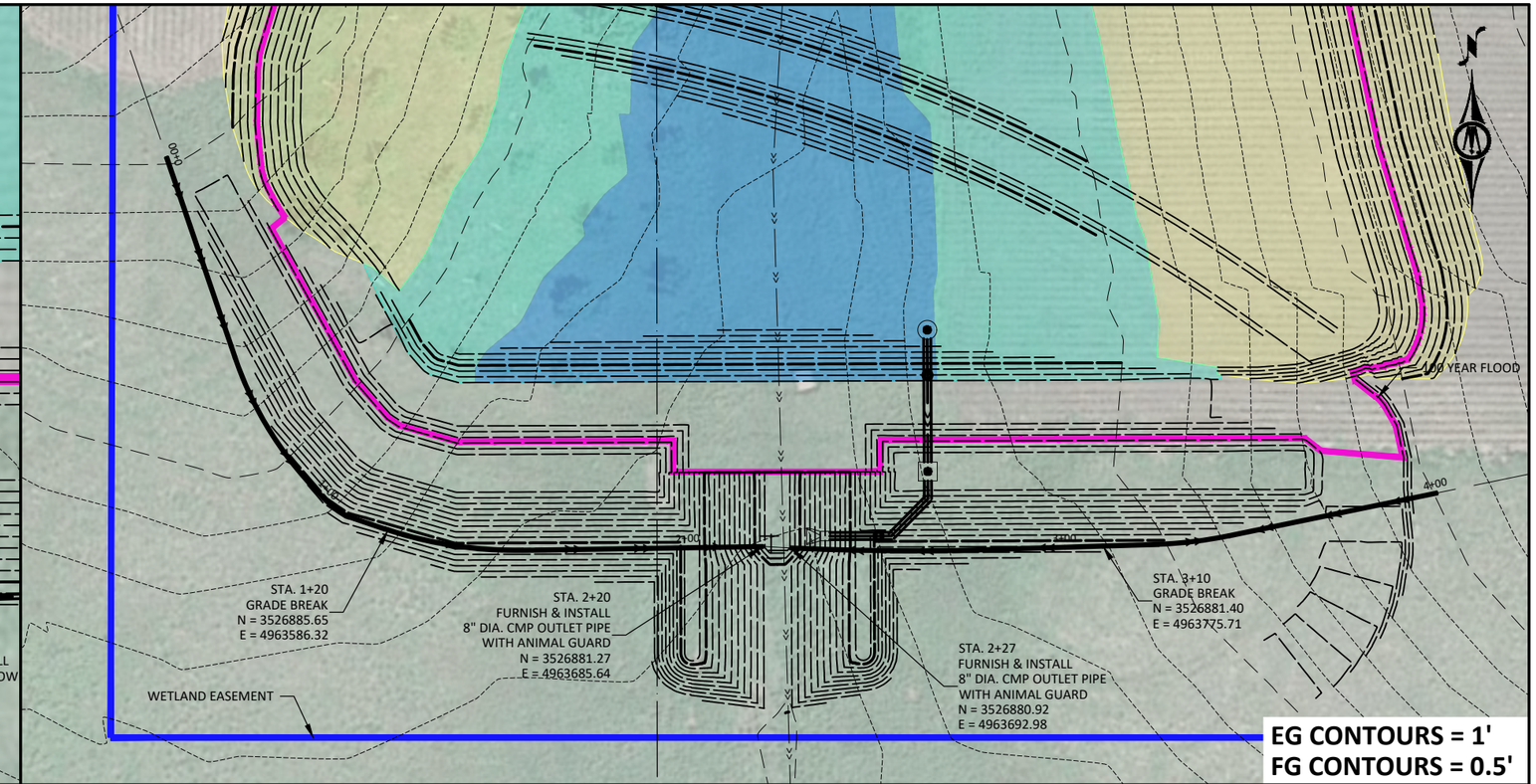

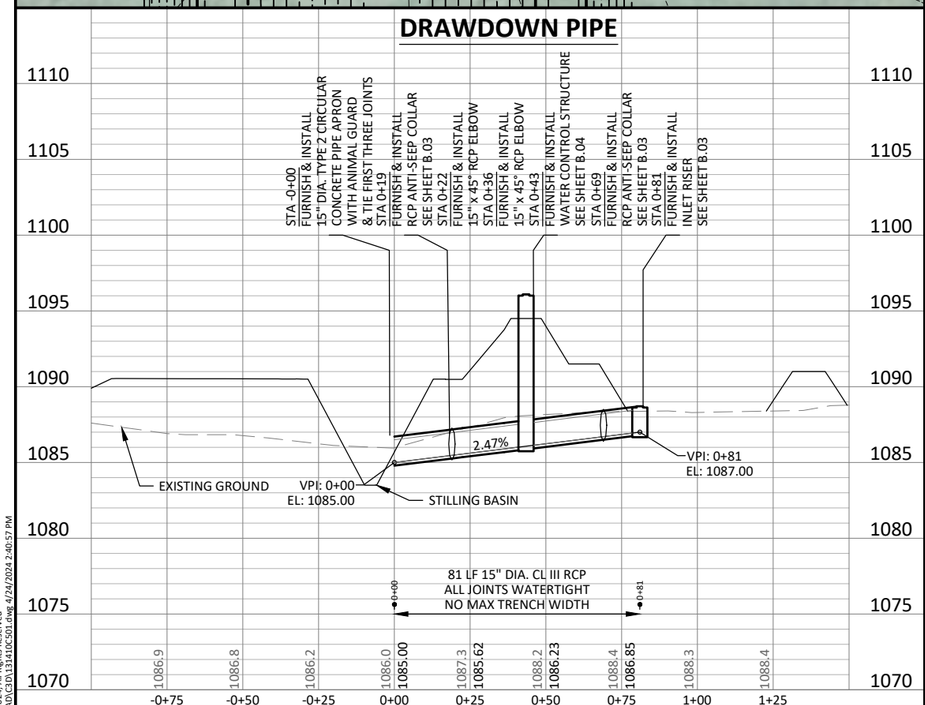

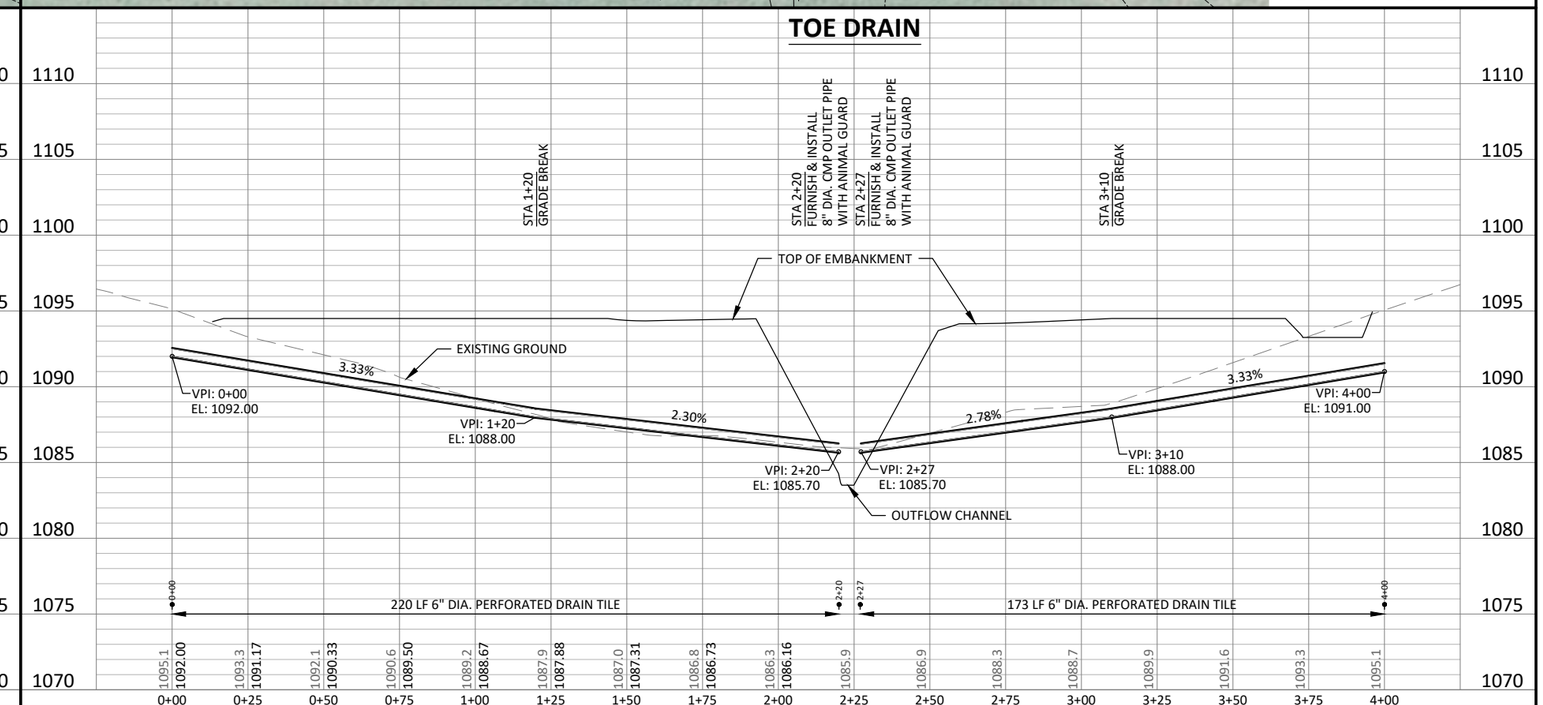

HORZ. 0 25 50 SCALE FEET
VERT. 0 5 10 SCALE FEET

BOLTON & MENK

1519 BALTIMORE DRIVE
AMES, IOWA 50010
Phone: (515) 233-6100
Email: Ames@bolton-menk.com
www.bolton-menk.com

DESIGNED	TJB
DRAWN	TJB
CHECKED	JPR
CLIENT PROJ. NO.	017.131410

REV	DESCRIPTION	DATE

IDALS WATER RESOUCES BUREAU
HENDERSON - PROJECT NO. STO852118B
PLAN & PROFILE - DRAWDOWN PIPE & TOE DRAIN

SHEET M.02