CONSTRUCTION PLANS FOR

IDALS NO. FLO971523B

NUTRIENT REDUCTION WETLAND

FLOYD COUNTY, IOWA

October 2025

GOVERNING SPECIFICATIONS

THE SPECIFICATIONS AS PREPARED BY IOWA DEPARTMENT OF AGRICULTURE AND LAND STEWARDSHIP AND BOLTON & MENK, INC. SHALL BE CONSIDERED AS PART OF THIS DOCUMENT. NATURAL RESOURCES CONSERVATION SERVICE CONSTRUCTION SPECIFICATIONS SHALL APPLY.

THE CURRENT EDITION OF THE "IOWA STATEWIDE URBAN STANDARD SPECIFICATIONS FOR PUBLIC IMPROVEMENTS" SHALL GOVERN.

IOWA DEPARTMENT OF TRANSPORTATION "STANDARD SPECIFICATIONS FOR HIGHWAY AND BRIDGE CONSTRUCTION",
SERIES 2023 AND ALL CURRENT GENERAL SUPPLEMENTAL SPECIFICATIONS AND MATERIALS INSTRUCTIONAL MEMORANDUM
SHALL GOVERN AS REFERENCED.

ALL APPLICABLE FEDERAL, STATE, AND LOCAL LAWS AND ORDINANCES WILL BE COMPLIED WITH IN THE CONSTRUCTION
OF THIS PROJECT.

IOWA ONE CALL
1-800-292-8989
www.iowaonecall.com
811 Know what's below. Call before you dig.

THE SUBSURFACE UTILITY INFORMATION IN THIS PLAN IS UTILITY QUALITY LEVEL D. THIS UTILITY QUALITY LEVEL WAS DETERMINED ACCORDING TO THE GUIDELINES OF CI/ASCE 38-02, ENTITLED "STANDARD GUIDELINES FOR THE COLLECTION AND DEPICTION OF EXISTING SUBSURFACE UTILITY DATA."
THE CONTRACTOR IS RESPONSIBLE FOR CONTACTING IOWA ONE CALL BY PHONE AT 811, OR ON THE WEB AT
HTTP://WWW.IOWAONECALL.COM/. TICKET# _____.
TICKET NUMBER MUST BE PROVIDED TO THE NRCS PRIOR TO COMMENCEMENT OF WORK.

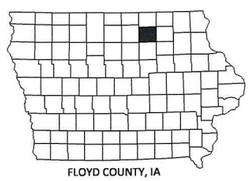

FLOYD COUNTY, IA

NOTES
1. IF A CULTURAL RESOURCE IS IDENTIFIED DURING CONSTRUCTION, STOP WORK IMMEDIATELY AND NOTIFY THE LOCAL NATURAL RESOURCES CONSERVATION SERVICE OFFICE.
2. THERE IS NO GUARANTEE THAT THE WETLAND WILL FILL OR REMAIN FILLED WITH WATER.

IOWA DEPARTMENT OF AGRICULTURE & LAND STEWARDSHIP

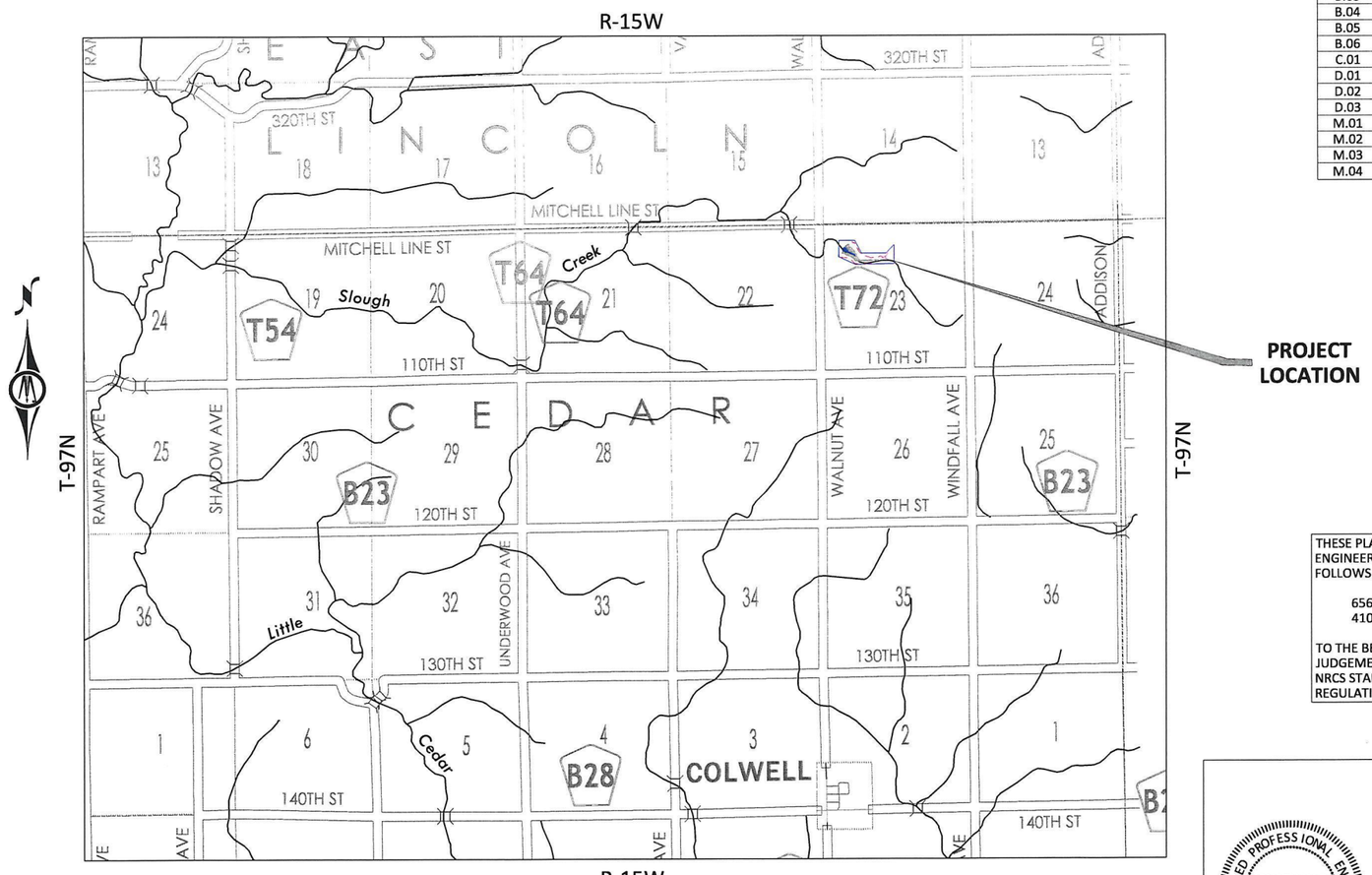

R-15W
MAP OF PORTIONS OF
FLOYD COUNTY, IOWA

SHEET INDEX	
NUMBER	TITLE
A.01	TITLE SHEET
A.02	OVERALL LAYOUT
A.03	SEEDING PLAN
A.04	BENCHMARK MAP
B.01	RCP INSTALLATION
B.02	CPDT INSTALLATION
B.03	MISC. STRUCTURE DETAILS
B.04	WATER CONTROL STRUCTURE DETAIL
B.05	STILLING BASIN DETAIL
B.06	SHEET PILE DETAIL
C.01	ESTIMATED QUANTITIES
D.01	PLAN & PROFILE - EMBANKMENT
D.02	PLAN & PROFILE - AUXILIARY SPILLWAY & BERM A
D.03	PLAN & PROFILE - BERM B & BERM C
M.01	PLAN & PROFILE - CENTER TILE RE-LAY
M.02	PLAN & PROFILE - NORTH TILE RE-LAY
M.03	PLAN & PROFILE - SOUTH TILE RE-LAY
M.04	PLAN & PROFILE - DRAWDOWN PIPE

THESE PLANS PREPARED IN ACCORDANCE WITH NRCS ENGINEERING JOB CLASS IV. STANDARDS FOR TASKS ARE AS FOLLOWS:

656 - SITE DESIGN
410 - OUTLET WEIR DESIGN

TO THE BEST OF MY PROFESSIONAL KNOWLEDGE, JUDGEMENT, AND BELIEVE, THESE PLANS MEET APPLICABLE NRCS STANDARDS AND APPLICABLE LAWS AND REGULATIONS.

LICENSED PROFESSIONAL ENGINEER JONATHAN P. ROSENGREN 21661 IOWA

I HEREBY CERTIFY THAT THIS ENGINEERING DOCUMENT WAS PREPARED BY ME OR UNDER MY DIRECT PERSONAL SUPERVISION AND THAT I AM A DULY LICENSED PROFESSIONAL ENGINEER UNDER THE LAWS OF THE STATE OF IOWA.

JONATHAN P. ROSENGREN, P.E.

REG. NO. 21661 DATE: October 20, 2025

MY LICENSE RENEWAL DATE IS 12/31/2026

PAGES OR SHEETS COVERED BY THIS SEAL:

ALL PLAN SHEETS

PROJECT DATUM: STATE PLANE
HORIZONTAL: IOWA NORTH
VERTICAL: NAVD 1988

BOLTON & MENK
1519 BALTIMORE DRIVE
AMES, IOWA 50010
Phone: (515) 233-6100
Email: Ames@bolton-menk.com
www.bolton-menk.com

DESIGNED	BCS
DRAWN	BCS
CHECKED	JPR
CLIENT PROJ. NO.	017.130786

REV	DESCRIPTION	DATE
1.0	BID PLANS	06-27-2025
1.1	ADDENDUM PLANS	10-16-2025

IOWA DEPARTMENT OF AGRICULTURE AND LAND STEWARDSHIP
IDALS PROJECT NO. FLO971523B
TITLE SHEET

SHEET A.01

© Bolton & Menk, Inc. 2025, All Rights Reserved
h:\IDALS\017130786\CAD\C3D\130786G001.dwg 10/20/2025 9:53:37 AM

DESIGN CRITERIA	VALUE	UNIT	REQUIREMENT
WATERSHED AREA	766	ACRES	
POOL NORMAL WATER LEVEL (NWL) ELEV	1171.00	FT	
DESIGNED WETLAND POOL AREA (@ NWL)	5.4	ACRES	
PERCENT POOL AREA TO WATERSHED AREA	0.7	%	Range 0.5% to 2% of watershed area
MAXIMUM POOL DEPTH	5	FT	
AVERAGE POOL DEPTH	1.0	FT	
DEEP WATER AREA (DEPTH > 3 FT)	0.1	ACRES	
PERCENT DEEP WATER TO POOL AREA	1.8	%	Less than 25%
POOL STORAGE VOLUME AT NWL	5.3	ACRE-FT	
TOP OF BERM ELEVATION	1175.50	FT	
POOL STORAGE VOLUME AT T.O. BERM	40.0	ACRE-FT	
PRIMARY WEIR ELEVATION	1171.00	FT	
PRIMARY WEIR WIDTH	45	FT	
AUXILIARY SPILLWAY ELEVATION	1173.25	FT	
TOTAL EASEMENT AREA	23.8	ACRES	
AREA OF BUFFER	18.4	ACRES	
RATIO BUFFER AREA TO NWL POOL AREA	3.4		Less than 4
10-YEAR STORM HWL IN POOL	1173.08	FT	
10-YEAR PEAK INFLOW	466.4	CFS	
10-YEAR PEAK OUTFLOW	458.06	CFS	
100-YEAR STORM HWL IN POOL	1174.13	FT	
100-YEAR PEAK INFLOW	917.63	CFS	
100-YEAR PEAK OUTFLOW	906.36	CFS	

WETLAND POOL DEPTH (FT)	ELEV (FT)	INCREMENTAL AREA (FT^2)	CUMULATIVE VOLUME (FT^3)	CUMULATIVE VOLUME (AC-FT)
0.0	1166.0	331		
1.0	1167.0	711	521	0.01
2.0	1168.0	4,142	2,948	0.07
3.0	1169.0	24,171	17,104	0.39
4.0	1170.0	83,379	70,879	1.63
5.0	1171.0	236,030	230,584	5.29
6.0	1172.0	245,478	471,338	10.82
7.0	1173.0	291,555	739,854	16.98
8.0	1174.0	357,974	1,064,619	24.44
9.0	1175.0	477,389	1,482,300	34.03
9.5	1175.5	546,969	1,738,390	39.91

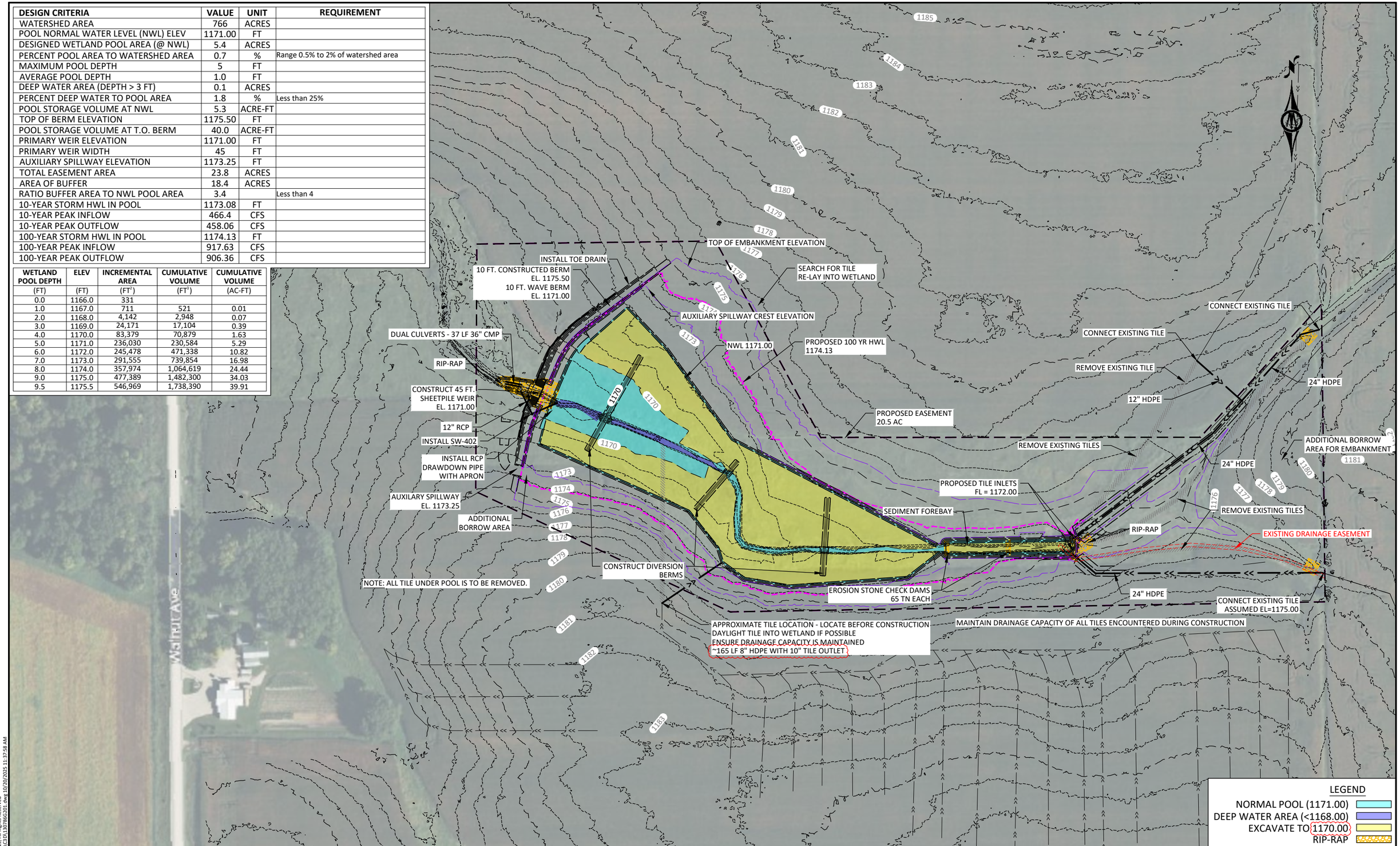

HORZ. 0 100 200
SCALE FEET

BOLTON & MENK
1519 BALTIMORE DRIVE
AMES, IOWA 50010
Phone: (515) 233-6100
Email: Ames@bolton-menk.com
www.bolton-menk.com

DESIGNED	REV	DESCRIPTION	DATE
BCS	1.0	BID PLANS	06-27-2025
DRAWN BCS	1.1	ADDENDUM PLANS	10-16-2025
CHECKED JPR			
CLIENT PROJ. NO. 0T7.130786			

IOWA DEPARTMENT OF AGRICULTURE AND LAND STEWARDSHIP

IDALS PROJECT NO. FLO971523B

OVERALL LAYOUT

SHEET A.02

© Bolton & Menk, Inc. 2025, All Rights Reserved
h:\IDALS\0T7130786\CAD\C3D\130786C201.dwg 10/20/2025 11:37:58 AM

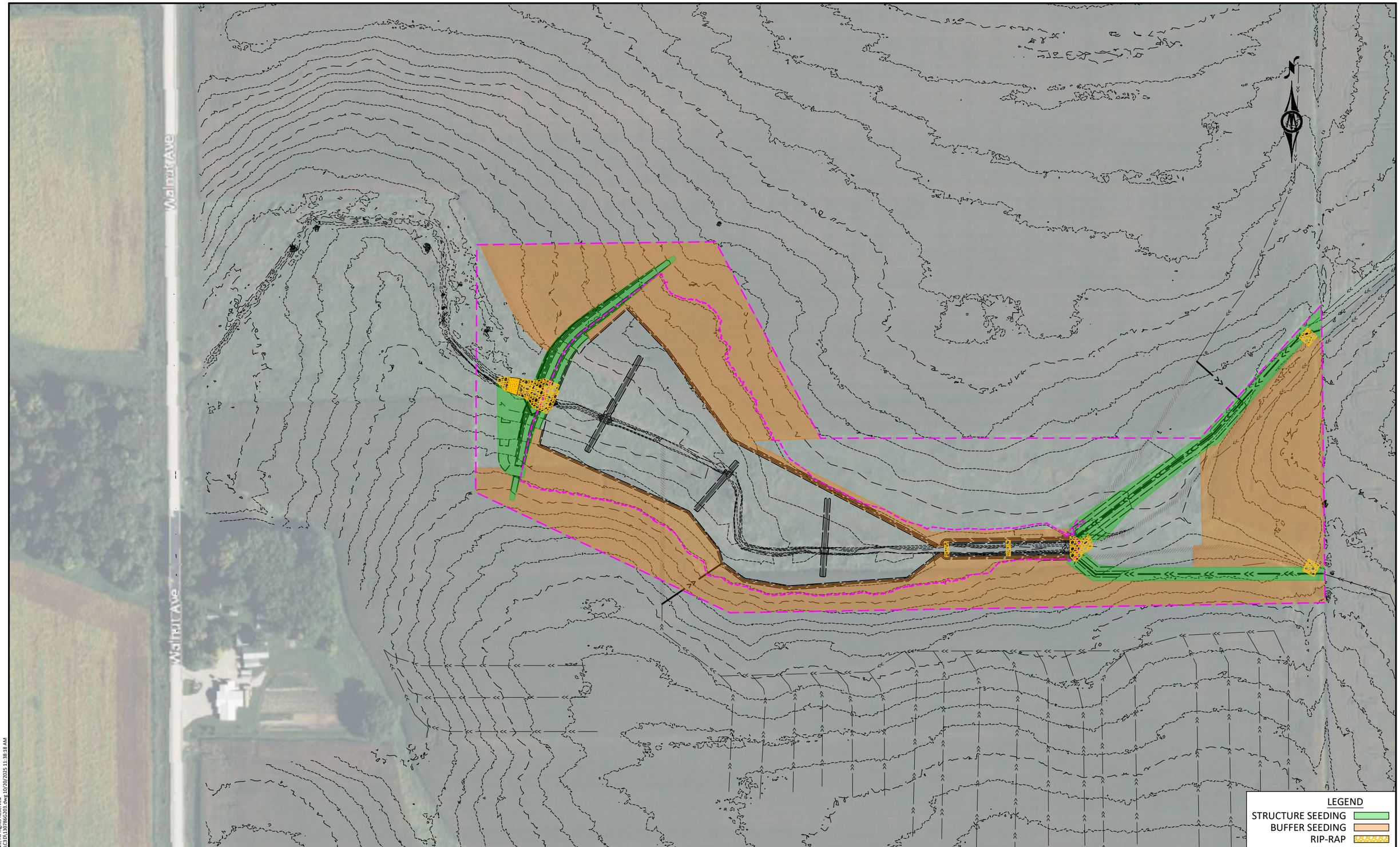

HORZ. 0 100 200
SCALE FEET

BOLTON & MENK

1519 BALTIMORE DRIVE
AMES, IOWA 50010
Phone: (515) 233-6100
Email: Ames@bolton-menk.com
www.bolton-menk.com

DESIGNED	BCS
DRAWN	BCS
CHECKED	JPR
CLIENT PROJ. NO.	0T7.130786

REV	DESCRIPTION	DATE
1.0	BID PLANS	06-27-2025
1.1	ADDENDUM PLANS	10-16-2025

IOWA DEPARTMENT OF AGRICULTURE AND LAND STEWARDSHIP

IDALS PROJECT NO. FLO971523B

SEEDING PLAN

SHEET A.03

©Bolton & Menk, Inc. 2025, All Rights Reserved
h:\IDALS\0t7130786\CAD\C3D\130786S203.dwg 10/20/2025 11:38:18 AM

Benchmark #	Northing	Easting	Elevation	Description
100	3906322.587	5162723.446	1177.899	LMFP/1IN DIA PIPE
101	3906384.254	5168014.505	1193.307	LMFP/1in PInched
102	3903667.215	5162750.901	1183.941	LMFR/ 5/8in
103	3906267.738	5165369.484	1184.229	LMFR/ 5/8in
104	3906242.433	5165368.799	1184.286	LMFR/ 5/8in
105	3906292.219	5165368.616	1183.406	LMFP/1in Bent Shot AT STraight
106	3903685.241	5165402.358	1188.058	LMFR/5/8IN ALUM CAP 19211
107	3903689.821	5166064.073	1184.942	LMFR/5/8IN
108	3901044.732	5165435.501	1187.949	LMFP/1IN
109	3906370.460	5162753.932	1177.165	LMFD/CON MON ALUM CAP
110	3906360.491	5162754.337	1177.59	LMFR/5/8
111	3906279.201	5162673.100	1176.056	LMFD/CON MON ALUM CAP
112	3906354.022	5162688.080	1175.65	LMFD/CON MON ALUM CAP

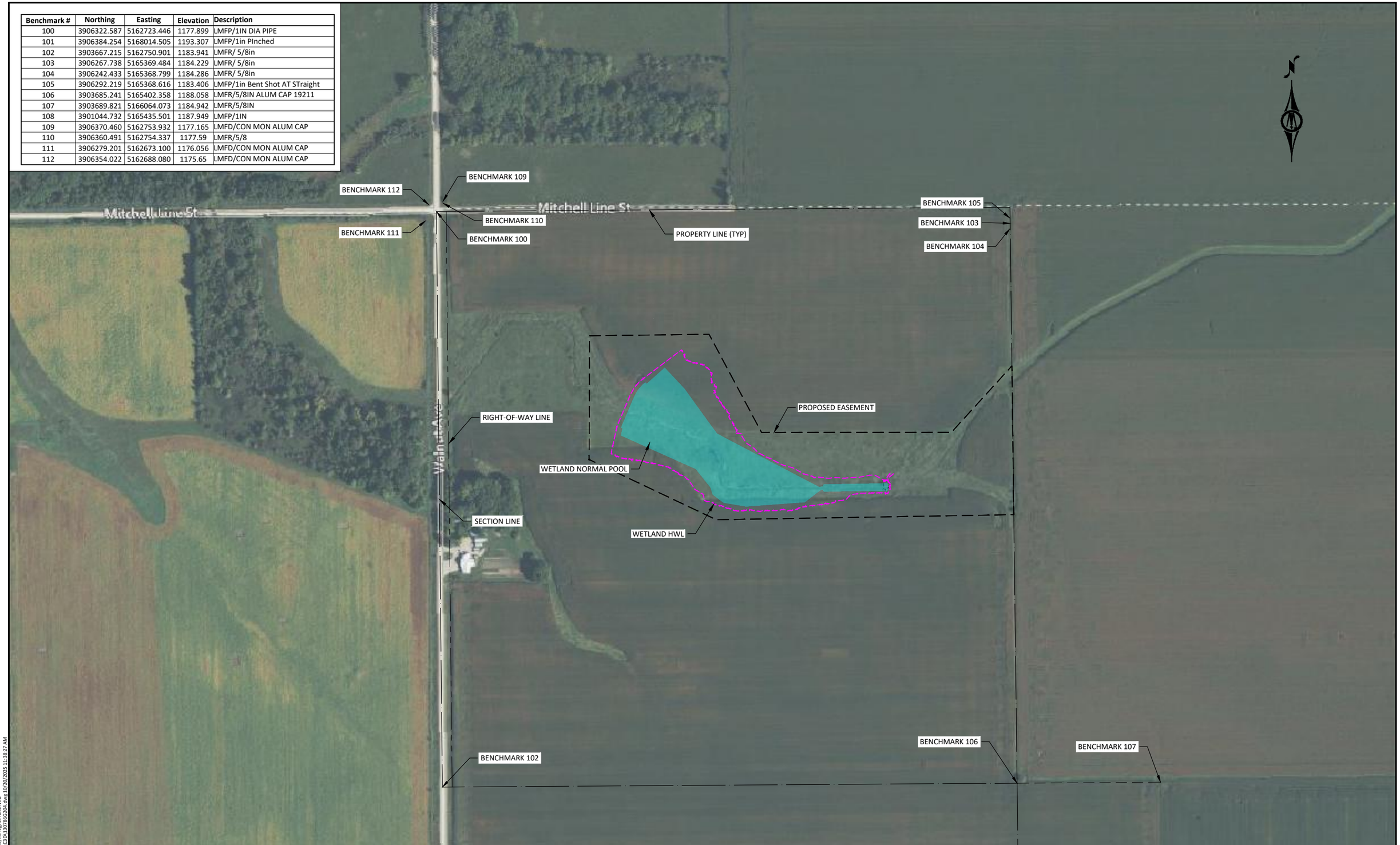

HORZ. 0 100 200 SCALE FEET

BOLTON & MENK

1519 BALTIMORE DRIVE
AMES, IOWA 50010
Phone: (515) 233-6100
Email: Ames@bolton-menk.com
www.bolton-menk.com

DESIGNED BCS
DRAWN BCS
CHECKED JPR
CLIENT PROJ. NO. OT7.130786

REV	DESCRIPTION	DATE
1.0	BID PLANS	06-27-2025
1.1	ADDENDUM PLANS	10-16-2025

IOWA DEPARTMENT OF AGRICULTURE AND LAND STEWARDSHIP

IDALS PROJECT NO. FLO971523B

BENCHMARK MAP

SHEET A.04

©Bolton & Menk, Inc. 2025, All Rights Reserved
h:\IDALS\OT7130786\CADD\Dwgs\130786G204.dwg 10/20/2025 11:38:27 AM

PIPE HAUNCH FILL AND COMPACTION METHOD
PLAN REQUIREMENTS COMPLIANCE VERIFICATION

THE CONTRACTOR IS SOLEY RESPONSIBLE FOR THE INSTALLATION OF ALL PIPE ACCORDING TO PLAN REQUIREMENTS. THE CONTRACTOR'S PARTICIPATION IN AND COMPLIANCE WITH THE FOLLOWING PROCEDURE IS REQUIRED AND WILL ALLOW FOR FEWER SOIL DENSITY TESTS TO ENSURE PROPER PIPE INSTALLATION.

STEP 1
BEFORE COMMENCING PIPE INSTALLATION, STANDARD SOIL PROCTOR DENSITY TEST RESULTS OF REPRESENTATIVE SAMPLE(S) OF PIPE HAUNCH FILL SHALL BE PROVIDED BY AN INDEPENDENT QUALIFIED SOILS TESTING LAB. THE SELECTION OF THE SAMPLE(S) WILL BE MADE BY THE ENGINEER AND CONTRACTOR (WHEN SPECIFIED).

STEP 2
CONTRACTOR MAY BEGIN EXCAVATING THE MODIFIED TYPE 4 TRENCH
WITH THE REQUIRED SHAPED BOTTOM GROOVE AND PLACE SEVERAL PIPE SECTIONS ONLY WHEN BOTH ENGINEER AND TESTING LAB TECHNICIAN ARE PRESENT

CONTRACTOR SHALL DEMONSTRATE THE INTENDED METHODS FOR COMPACTING THE FILL FOR THE PIPE HAUNCH AREAS. SOIL DENSITY TESTS SHALL BE TAKEN AT LOCATIONS DESIGNATED BY THE ENGINEER TO CONFIRM THAT THE INTEDNED METHODS FOR FILL AND COMPACTION OF THE PIPE HAUNCH AREAS SATIFIES THE PLAN REQUIREMENTS. CONTRACTOR SHALL MODIFIY THE INSTALLATION METHODS AND REPEAT STEP 2 UNTIL ACCEPTABLE TESTS RESULTS ARE ACHIEVED.

STEP 3
CONTRACTOR MAY INSTALL THE NEXT SEVERAL HUNDRED FEET OF PIPE. ENGINEER SHALL DESIGNATE SEVERAL LOCATIONS (APPROXIMATELY 10% OF THE INSTALLED LENGTH) WHERE CONTRACTOR SHALL LEAVE THE PIPE UNBLINDED FOR FURTHER DENSITY TESTS OF THE HAUNCH FILL AREA. ALL DENSITY TESTS MUST MEET PLAN REQUIREMENTS BEFORE WORK MAY PROCEED FURTHER.

IF DENSITY TESTING DATA CONFIRMS TO THE SATISFACTION OF THE ENGINEER THAT THE CONTRACTOR'S INSTALLATION METHOD WILL PRODUCE CONSISTENT COMPLIANCE WITH PLAN REQUIREMENTS, CONTRACTOR MAY CONTINUE INSTALLATION OF THE PIPE WITH NO ADDITIONAL TESTING REQUIRED. IF NOT, STEPS 2 AND 3 SHALL BE REPEATED UNTIL A RELIABLE, SUCCESSFUL METHOD OF PIPE INSTALLATION THAT PRODUCES SATISFACTORY RESULTS IS ESTABLISHED.

CONTRACTOR IS REQUIRED TO PROPERLY AND ADEQUATELY INSTRUCT SUBCONTRACTORS AND/OR SUBSEQUENT PIPE INSTALLATION WORKERS ON THE PROPER INSTALLATION METHOD.

STEP 4A
SOIL OR TRENCH CONDITION CHANGES

TO VERIFY CONTRACTOR'S COMPLIANCE WITH PLAN REQUIREMENTS UNDER THE CHANGED CONDITIONS, ENGINEER MAY STOP WORK AND REQUIRE ADDITIONAL SOIL PROCTOR TESTS AND/OR SOIL DENSITY TESTS SIMILAR TO STEPS 1 THROUGH 3. THE WORK AND COSTS OF THE FIRST TWO REVERIFICATIONS IS SUBSIDIARY TO THE PIPE INSTALLATION. SUBSEQUENT VERIFICATIONS WILL BE CONSIDERED EXTRA WORK.

STEP 4B
CONTRACTOR FAILS TO CONSISTENTLY PERFORM INSTALLATION METHOD OR INSTRUCT OTHER INSTALLERS

IF CONTRACTOR FAILS TO CONSISTENTLY PERFORM OR ADEQUATELY INSTRUCT SUBCONTRACTORS AND/OR SUBSEQUENT PIPE INSTALLATION WORKERS ON THE APPROVED INSTALLATION METHOD, ENGINEER MAY STOP WORK AND REQUIRE ADDITIONAL SOIL PROCTOR TESTS AND/OR SOIL DENSITY TESTS SIMILAR TO STEPS 1 THROUGH 3 TO VERIFY CONTRACTOR'S COMPLIANCE WITH PLAN REQUIREMENTS. THE WORK AND COSTS OF ALL VERIFICATIONS UNDER SUCH CONDITIONS IS SUBSIDIARY TO THE PIPE INSTALLATION.

EXCEPTION
IF CONTRACTOR ELECTS TO SHAPE THE TRENCH BOTTOM SUCH THAT A MINIMUM OF 45% OF THE OUTER CIRCUMFERENCE OF THE PIPE IS FIRMLY BEDDED IN AND CONSISTENTLY SUPPORTED BY UNDISTURBED SOIL, PIPE HAUNCH FILL COMPACTION TESTING WILL NOT BE REQUIRED. THE CONTRACTOR IS REQUIRED TO COMPLY WITH A PROPER INSTALLATION METHOD AND TO FULLY COMPLY WITH THE REQUIREMENTS OF THE VERIFICATION OUTLINED ABOVE FOR ALL SITUATIONS WHERE THIS EXCEPTION IS NOT MET.

CRUSHED ROCK MEETING THE GRADATION OF SUDAS CLASS I BEDDING MATERAL, SPECIFICATION SECTION 3010.2.02.A, MAY BE SUBSTITUTED FOR THE SAND OR CLAY HAUNCH BACKFILL MATERIAL. NO COMPACTION WILL BE REQUIRED FOR THE CRUSHED ROCK BEDDING AND BACKFILL. MATERIAL COSTS SHALL BE INCIDENTAL TO PIPE INSTALLATION.

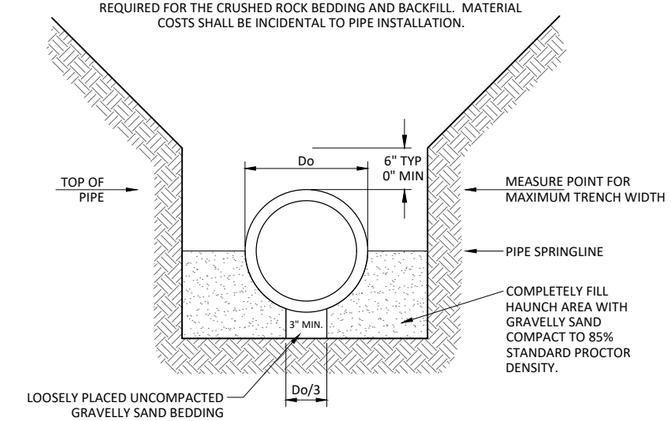

GRAVELLY SAND BEDDING SHALL BE CONSISTENT WITH THE GRADATION AND OTHER CHARACTERISTICS OF STANDARD AASHTO A1 OR A3 SOIL. A REPRESENTATIVE SAMPLE OF THE MATERIAL AND A GRADATION REPORT OR SUPPLIER'S CERTIFICATION OF COMPLIANCE SHALL BE SUBMITTED TO THE ENGINEER FOR APPROVAL PRIOR TO DELIVERY TO SITE. SEE SOIL DATA IN APPENDIX OF SPECIFICATIONS BOOKLET.

TRENCH INSTALLATION TYPE 3
NOT TO SCALE
SOURCE: AMERICAN CONCRETE PIPE ASSOCIATION
CONCRETE PIPE DESIGN MANUAL

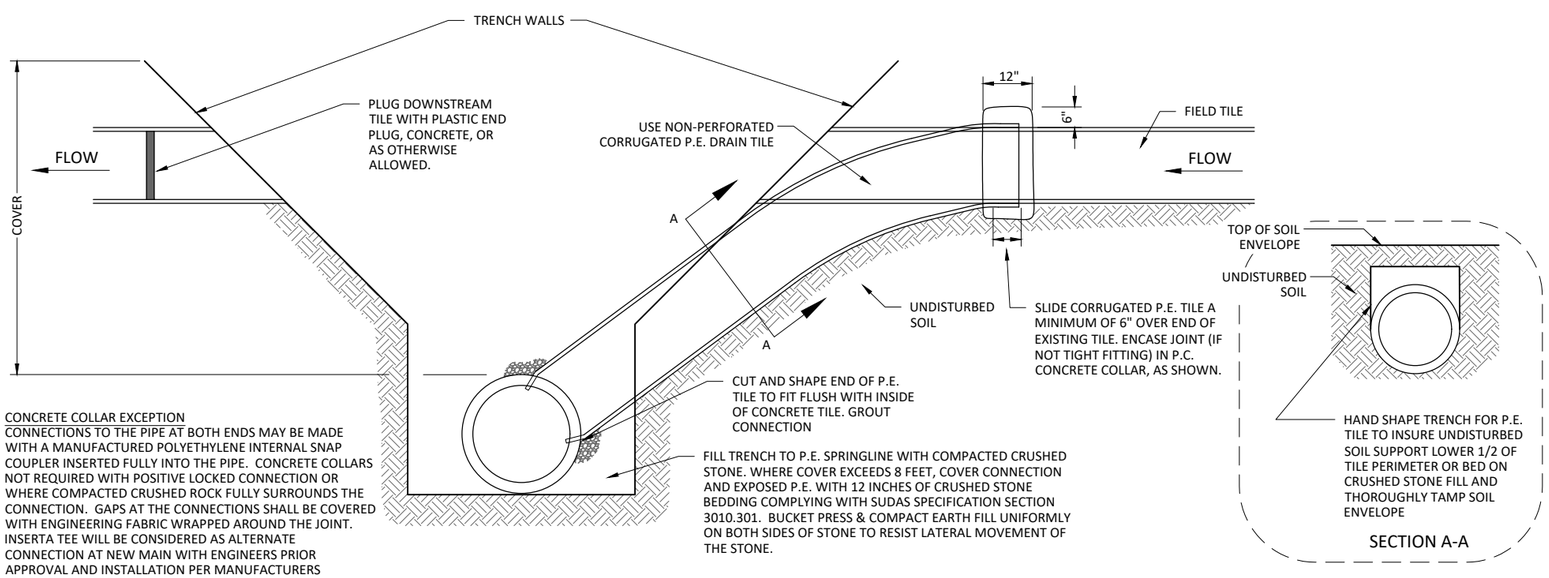

CONCRETE COLLAR EXCEPTION
CONNECTIONS TO THE PIPE AT BOTH ENDS MAY BE MADE WITH A MANUFACTURED POLYETHYLENE INTERNAL SNAP COUPLER INSERTED FULLY INTO THE PIPE. CONCRETE COLLARS NOT REQUIRED WITH POSITIVE LOCKED CONNECTION OR WHERE COMPACTED CRUSHED ROCK FULLY SURROUNDS THE CONNECTION. GAPS AT THE CONNECTIONS SHALL BE COVERED WITH ENGINEERING FABRIC WRAPPED AROUND THE JOINT. INSERTA TEE WILL BE CONSIDERED AS ALTERNATE CONNECTION AT NEW MAIN WITH ENGINEERS PRIOR APPROVAL AND INSTALLATION PER MANUFACTURERS RECOMMENDATION.

TYPICAL FIELD TILE CONNECTION
FOR FIELD TILE UP TO 10" DIAMETER

MINIMUM TRENCH WIDTH SHALL BE OUTSIDE DIAMETER OF PIPE PLUS 12" OR THAT WIDTH WHICH IS REQUIRED FOR COMPACTION, WHICHEVER IS GREATER

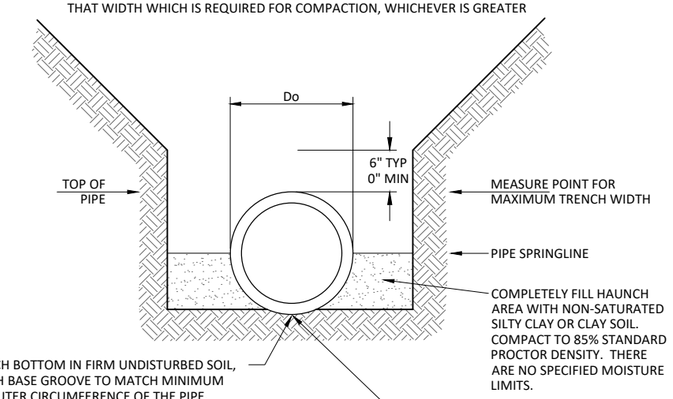

MODIFIED TRENCH INSTALLATION TYPE 4
NOT TO SCALE
SOURCE: AMERICAN CONCRETE PIPE ASSOCIATION
CONCRETE PIPE DESIGN MANUAL

©Bolton & Menk, Inc. 2025, All Rights Reserved
h:\IDALS\0t7130786\CAD\C3D\130786C101.dwg 10/20/2025 11:38:29 AM

BOLTON & MENK
1519 BALTIMORE DRIVE
AMES, IOWA 50010
Phone: (515) 233-6100
Email: Ames@bolton-menk.com
www.bolton-menk.com

DESIGNED	BCS
DRAWN	BCS
CHECKED	JPR
CLIENT PROJ. NO.	0T7.130786

REV	DESCRIPTION	DATE
1.0	BID PLANS	06-27-2025
1.1	ADDENDUM PLANS	10-16-2025

IOWA DEPARTMENT OF AGRICULTURE AND LAND STEWARDSHIP
IDALS PROJECT NO. FLO971523B
RCP INSTALLATION

SHEET
B.01

CORRUGATED POLYETHYLENE DRAINAGE TUBING MATERIAL & INSTALLATION NOTES

1. ALL CPDT AND CONNECTORS FURNISHED SHALL BE IN COMPLIANCE WITH MATERIAL STANDARDS ASTM F405 AND F667, AS APPLICABLE, AND SHALL BE CLASSIFIED AS HEAVY-DUTY UNDER THOSE STANDARDS.
2. EXCEPT MODIFIED HEREIN OR OTHERWISE APPROVED BY ENGINEER, ALL CPDT SHALL BE INSTALLED IN COMPLIANCE WITH THE ASTM 449 STANDARD PRACTICE.
3. FOR PIPES 6" DIAMETER AND SMALLER A 90° V GROOVE BOTTOM MAY BE USED, FOR ALL LARGER PIPE A TRAPEZOIDAL BOTTOM OR A CIRCULAR BOTTOM CONFORMING TO THE OUTSIDE DIAMETER OF THE PIPE SHALL BE USED. PRIOR TO THE INSTALLATION OF CPDT, CONTRACTOR MUST PROVE TO ENGINEER THAT THE INSTALLATION REQUIREMENTS, INCLUDING THE SHAPE OF THE TRENCH BOTTOM, WILL BE ACCOMPLISHED.
4. WHERE TRENCH BOTTOM IS IN FIRM UNDISTURBED SOIL, SHAPE TRENCH BASE GROOVE. WHERE EXCESS CUT OCCURS, OVEREXCAVATE AND PLACE MINIMUM THREE (3) INCH THICK, GRAVELLY SAND BEDDING TO RESTORE GRADE. THIS BEDDING SHALL MEET THAT REQUIRED FOR TRENCH INSTALLATION TYPE 3 ON PLAN SHEET C.02. IF DUE TO CONTRACTOR ERROR THIS MATERIAL AND WORK IS SUBSIDIARY TO THE INSTALLATION OF THE PIPE. CONTRACTOR MAY SUBSTITUTE PIPE BEDDING ROCK AS THE BEDDING MATERIAL.
5. NATIVE SOILS MAY BE USED AS BACKFILL MATERIAL UNLESS UNSTABLE TRENCH CONDITIONS PREVENT THE TRENCH BOTTOM HOLDING THE SHAPED GROOVE. IF TRENCH BOTTOM WILL NOT HOLD GROOVE SHAPE CONTRACTOR SHALL NOTIFY ENGINEER IMMEDIATELY. A FLAT BOTTOM TRENCH INSTALLATION WILL THEN BE ASSUMED. THE REQUIRED BEDDING MATERIAL WILL BE PAID UNDER THE TILE TRENCH STABILIZATION AND CRADLING ROCK BID ITEM.
6. MINIMUM TRENCH WIDTH IS PIPE OUTSIDE DIAMETER PLUS FOUR (4) INCHES FOR PLOWED INSTALLATION AND PIPE OUTSIDE DIAMETER PLUS TWELVE (12) INCHES FOR OPEN TRENCH INSTALLATION.
7. ALL LATERAL CONNECTIONS, ELBOWS, TEES, ALIGNMENT CURVES, START HOLES AND ALL PORTIONS OF THE TRENCH NOT MEETING THE GROOVED TRENCH INSTALLATION REQUIREMENTS SHALL BE FILLED TO A MINIMUM OF SIX (6) INCH COVER OVER THE PIPE WITH GRADED CRUSHED STONE OR GRAVEL AS SHOWN ON TABLE 2 OF THIS SHEET. UNLESS DUE TO CONTRACTOR ERROR THIS BEDDING MATERIAL WILL BE PAID UNDER THE TILE TRENCH STABILIZATION AND CRADLING ROCK BID ITEM.
8. MANUFACTURER'S ENDCAPS SHALL BE INSTALLED AT THE TERMINATION OF EACH LINE UNLESS A CONNECTION TO AN EXISTING DRAIN IS MADE.
9. WITH THE INSTALLATION OF THE FIRST REACH OF CPDT ON THE PROJECT, CONTRACTOR IS REQUIRED TO WORK WITH THE ENGINEER TO CHECK AND CONFIRM THAT THE PIPE STRETCH, IF ANY, DOES NOT EXCEED 5%.
10. ALIGNMENT TURNS MAYBE MADE USING EITHER A MANUFACTURED FITTING OR CURVING THE LINE WITH A 25' MINIMUM RADIUS.

Table 1
Maximum Allowable Buried Depth to Flowline of CPDT

Nominal Pipe Diameter (IN)	Pipe Quality (ASTM)	Trench Width at Top of the Pipe (FT)			
		12"	18"	24"	30" or Greater
4	Standard	13	7	5.5	5
	Heavy-duty	Any	10	7	6
6	Standard	10	7	5.5	5
	Heavy-duty	Any	9.5	6.5	6
8	Standard	10	7	5.5	5
	Heavy-duty	Any	10	7	6
10	Heavy-duty	...	9	7	6
12	Heavy-duty	...	9	7	6
15	Heavy-duty	...	...	7	6

Table 2
Acceptable Bedding Material and Compaction Requirements

Description	Percentage Passing Sieve Sizes			Minimum Standard Density (%)	Maximum Compaction Layer Height (IN.)
	1"	3/4"	No. 4		
Crushed Stone Crushed Gravel*	100%	> 95%	< 5%	Dumped	18

* Class 1 Bedding Material Per SUDAS 3010.202A is an Allowable Substitute

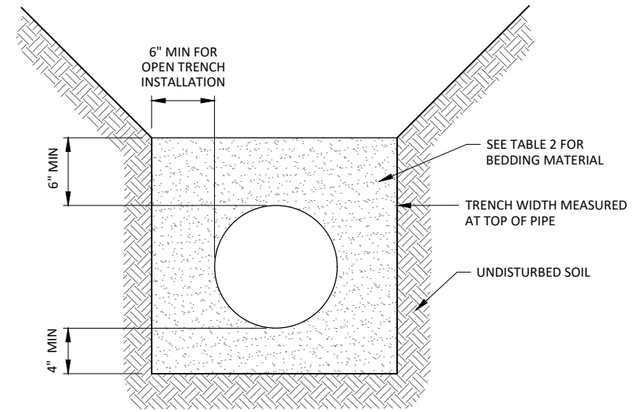

FILL TRENCH TO 6" ABOVE TOP OF PIPE WITH CRUSHED STONE OR GRAVEL MEETING THE REQUIREMENTS IN TABLE 2. BEDDING MATERIAL SHALL BE INCIDENTAL TO THE PIPE INSTALLATION.

FLAT BOTTOM TRENCH INSTALLATION

NOT TO SCALE
SOURCE: ASTM F449

NOTE: THIS IS AN ALLOWED ALTERNATIVE INSTALLATION FOR CPDT

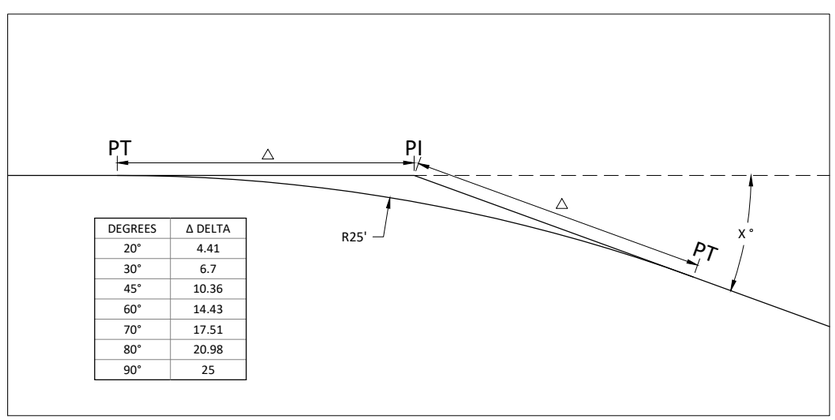

DEGREES	Δ DELTA
20°	4.41
30°	6.7
45°	10.36
60°	14.43
70°	17.51
80°	20.98
90°	25

THE CIRCULAR GROOVE SHALL BE A MINIMUM 0.35R DEEP AND SHALL MATCH THE OUTSIDE CURVE SHAPE OF THE DEFLECTED CPDT.

THE TRAPEZOIDAL GROOVE SHALL BE SHAPED AND ADJUSTED SUCH THAT POINTS A, B, & C WILL TOUCH THE UNDEFLECTED CPDT FOR EACH SIZE INSTALLED.

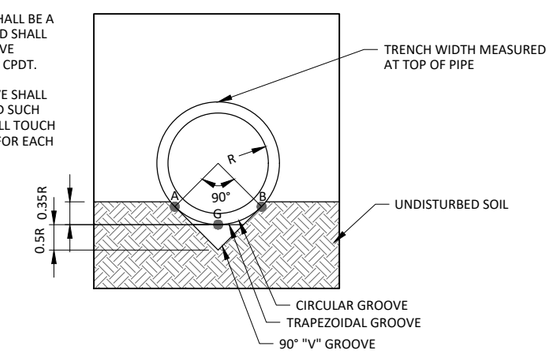

PREFFERED TRENCH INSTALLATION BOTTOM

TRAPEZOIDAL GROOVE, "V" GROOVE, & CIRCULAR GROOVE
NOT TO SCALE
SOURCE: ASTM F449

©Bolton & Menk, Inc. 2025, All Rights Reserved
h:\IDALS\07130786\CAD\C3D\130786C101.dwg 10/20/2025 11:38:32 AM

BOLTON & MENK
1519 BALTIMORE DRIVE
AMES, IOWA 50010
Phone: (515) 233-6100
Email: Ames@bolton-menk.com
www.bolton-menk.com

DESIGNED BCS
DRAWN BCS
CHECKED JPR
CLIENT PROJ. NO. 07.130786

REV	DESCRIPTION	DATE
1.0	BID PLANS	06-27-2025
1.1	ADDENDUM PLANS	10-16-2025

IOWA DEPARTMENT OF AGRICULTURE AND LAND STEWARDSHIP
IDALS PROJECT NO. FLO971523B
CPDT INSTALLATION

SHEET B.02

TOE DRAIN CROSS SECTION

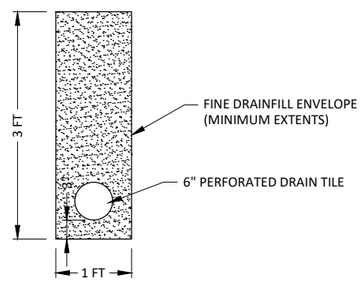

OUTLET RISER DETAIL

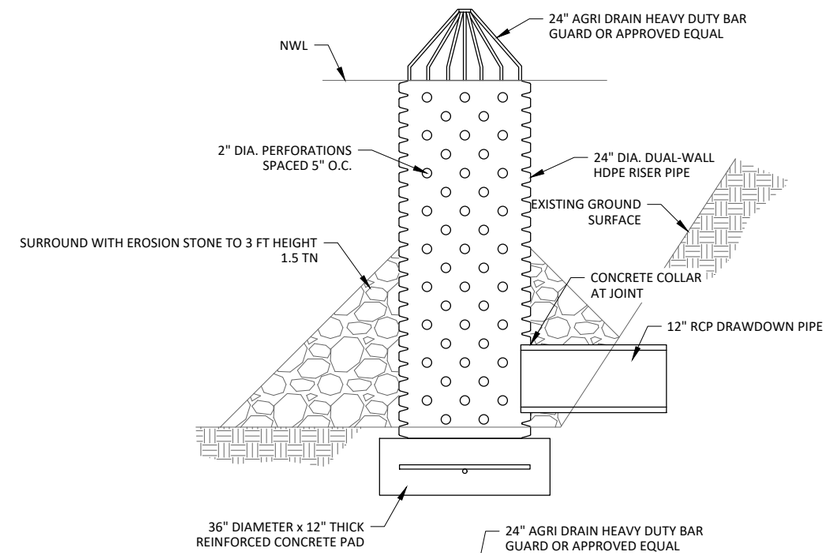

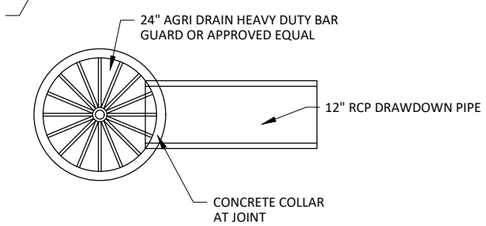

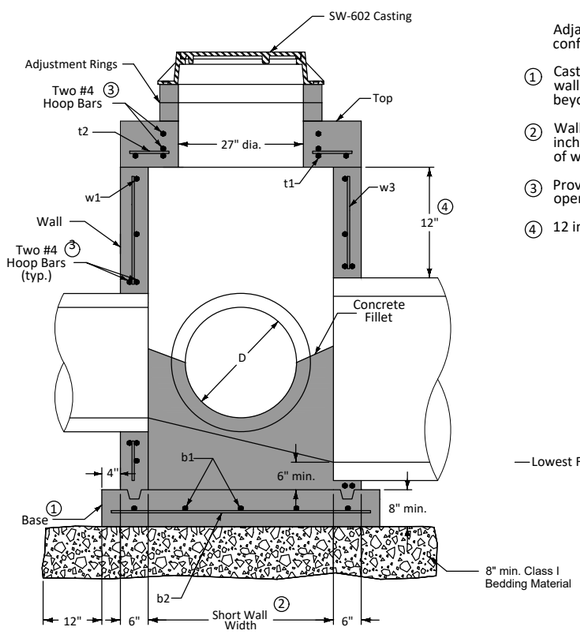

TYPICAL SECTION
(not to scale)

Adjacent walls may have different widths based upon pipe configuration, but structure must be rectangular.

① Cast-in-place base shown. If base is precast integral with walls, the footprint of the base is not required to extend beyond the outer edge of the walls.

② Wall widths vary with pipe diameter and range from 40 inches minimum to 77 inches maximum. Provide 6 inches of wall width (minimum) each side of pipe opening.

③ Provide two #4 hoop bars at top opening and at all pipe openings.

④ 12 inch minimum wall height above all pipes.

SUDAS	Iowa Department of Transportation	REVISION	
		NEW	04-21-09
FIGURE 6010.402	STANDARD ROAD PLAN	SW-402	
		SHEET 1 of 1	
REVISIONS:			
SUDAS DIRECTOR	DESIGN METHODS ENGINEER		
RECTANGULAR STORM SEWER MANHOLE			

SW-402
SEE SHEET B.04 FOR MODIFICATIONS

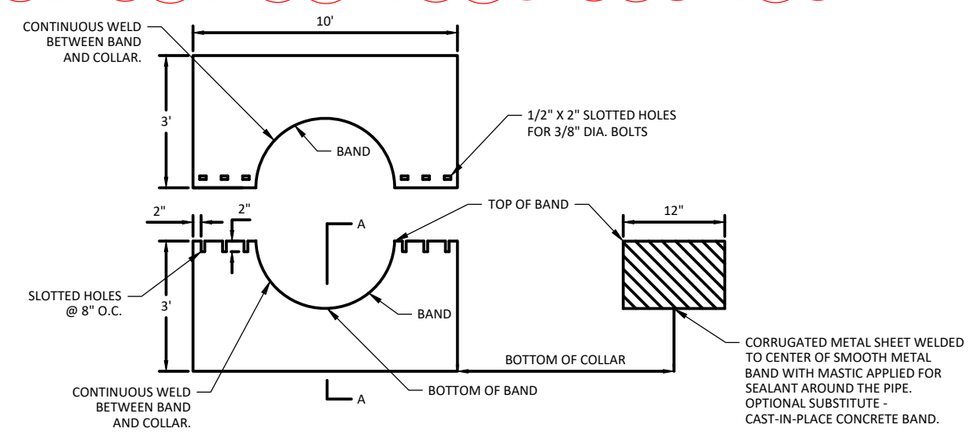

RCP ANTI-SEEP COLLAR
NOT TO SCALE

©Bolton & Menk, Inc. 2025, All Rights Reserved
h:\IDALS\0713078\6\CAD\C3D\130786C101.dwg 10/20/2025 11:38:37 AM

BOLTON & MENK
1519 BALTIMORE DRIVE
AMES, IOWA 50010
Phone: (515) 233-6100
Email: Ames@bolton-menk.com
www.bolton-menk.com

DESIGNED	REV	DESCRIPTION	DATE
BCS	1.0	BID PLANS	06-27-2025
DRAWN BCS	1.1	ADDENDUM PLANS	10-16-2025
CHECKED JPR			
CLIENT PROJ. NO. 0T7.130786			

IOWA DEPARTMENT OF AGRICULTURE AND LAND STEWARDSHIP
IDALS PROJECT NO. FLO971523B
MISC. STRUCTURE DETAILS

SHEET B.03

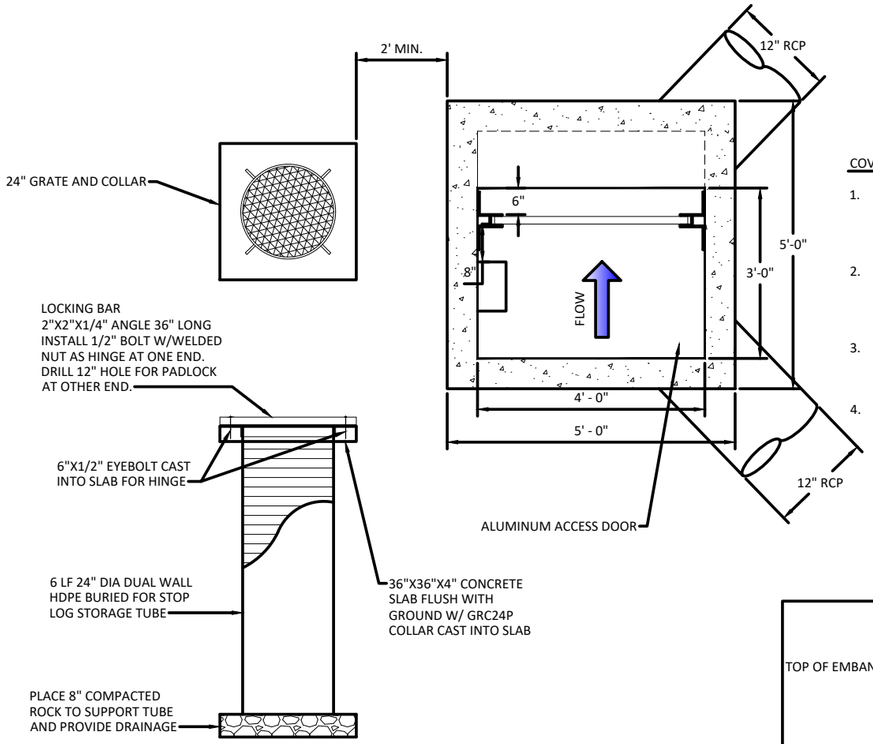

COVER AND STOP LOG STORAGE DETAIL

NOT TO SCALE

COVER/STOP LOG STORAGE NOTES:

1. PROVIDE (HALLIDAY PRODUCTS MODEL S1R3648 OR APPROVED EQUAL) 36" x 48" ALUMINUM ACCESS DOOR WITH LOCKING MECHANISM AND LIFTING HANDLE.
2. BOTH PADLOCKS FOR ACCESS DOOR AND STOP LOG STORAGE TUBE SHALL BE KEYED ALIKE. FOUR KEYS ARE TO BE SUPPLIED UPON PROJECT COMPLETION.
3. TOP OF STRUCTURE SHALL BE AN 8" THICK REINFORCED PRECAST TOP WITH ALUMINUM ACCESS DOOR CAST INTO TOP.
4. PROVIDE 24" GRATE AND COLLAR (AGRI DRAIN GR24 GRATE AND GRC24 COLLAR OR APPROVED EQUAL) FOR STOP LOG STORAGE.

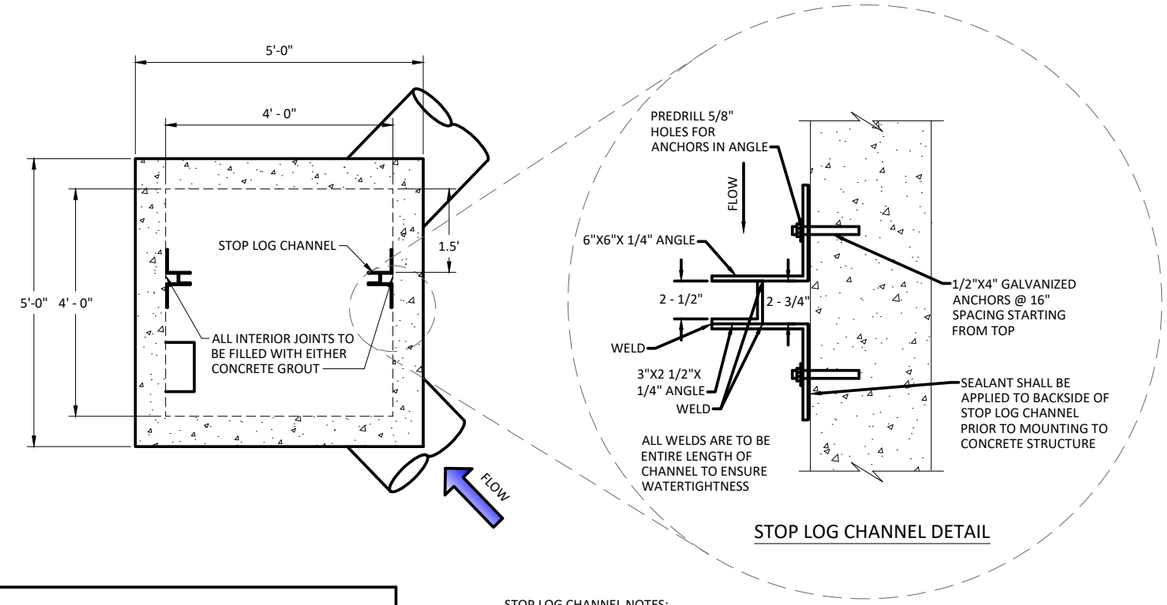

STOP LOG CHANNEL DETAIL

STOP LOG CHANNEL NOTES:

1. ALL STEEL SHALL BE FY=36 KSI.
2. ANCHORS SHALL BE GALVANIZED STEEL FURNISHED W/NUTS, WASHERS AND LOCK WASHERS.
3. STOP LOG CHANNEL SHALL BE FURNISHED AS ONE CONTINUOUS PIECE W/CONTINUOUS WELDS.
4. ALL STEEL STOP LOG CHANNEL COMPONENTS ARE TO BE GALVANIZED AFTER WELDING AND DRILLING IS COMPLETE.
5. CONTRACTOR IS TO APPLY SEALANT VERY GENEROUSLY TO BACKSIDE OF STOP LOG CHANNEL TO ENSURE WATERTIGHT SEAL. SEALANT SHALL BE SIKA 30 YEAR INDUSTRIAL CAULK IN LIMESTONE GREY OR APPROVED EQUIVALENT.

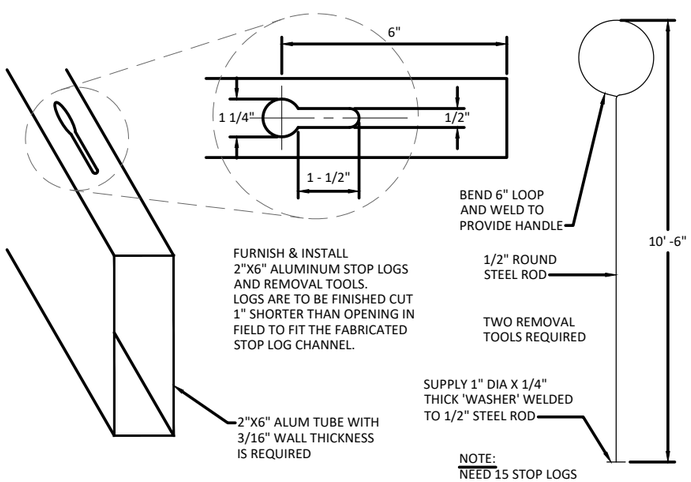

STOP LOG & REMOVAL TOOL DETAIL

NOT TO SCALE

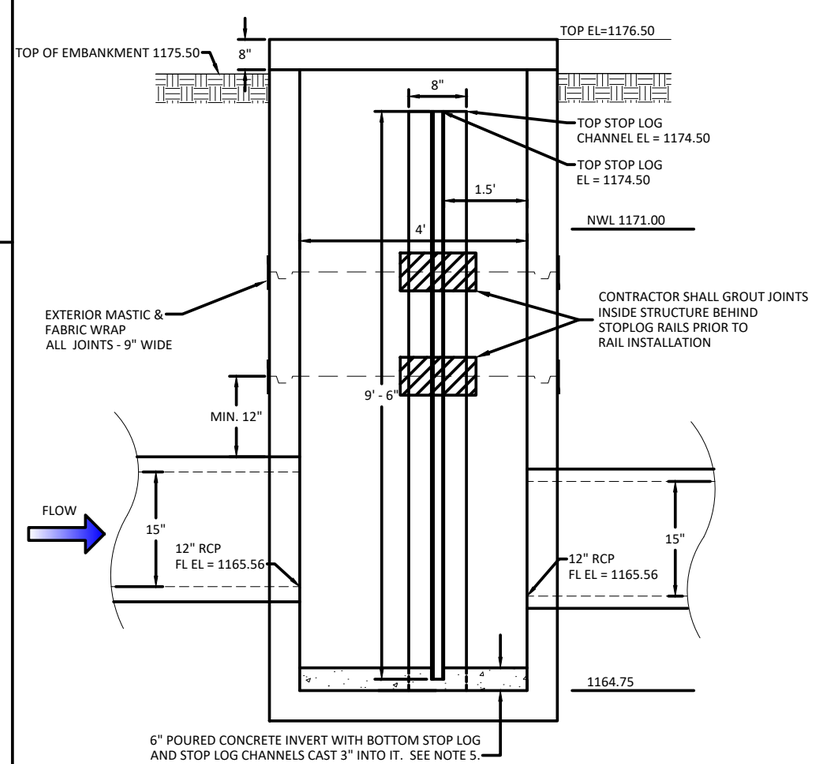

SW-402 WATER CONTROL OUTLET STRUCTURE ELEVATION

NOT TO SCALE

WATER CONTROL STRUCTURE NOTES:

1. STRUCTURE FABRICATION AND INSTALLATION SHALL CONFORM TO SUDAS 6010.302 SW-402 SANITARY MANHOLE
2. STRUCTURE SHOP DRAWINGS ARE REQUIRED FOR ENGINEER'S REVIEW AND APPROVAL BEFORE FABRICATION OF WATER CONTROL STRUCTURE.
3. PRECAST WATER CONTROL STRUCTURE SHALL BE SUPPLED IN 2 OR 3 SECTIONS, PLUS AN 8" THICK COVER SECTION. SECTION SIZE IS LEFT TO CONTRACTOR'S DISCRETION EXCEPT BOTTOM SECTION SHALL INCLUDE BASE AND WALLS TO 12" ABOVE INLET HOLE.
4. STOP LOG CHANNEL IS TO BE ANCHORED TO THE WALLS AND FLOOR PRIOR TO PLACING CONCRETE INVERT.
5. A CONCRETE INVERT IS TO BE INSTALLED AFTER STOP LOG CHANNEL IS INSTALLED. THE BOTTOM STOP LOG IS TO BE CAST INTO THE INVERT WITH THREE HALF INCH DIA. "J BOLTS" FASTENED TO THE BOTTOM STOP LOG. NO LIFTING HOLES ARE REQUIRED FOR THIS BOTTOM LOG.
6. ALL SECTIONS OF THE STRUCTURE ARE TO HAVE "TONGUE AND GROOVE" JOINTS SEALED WITH O RING GASKETS IN THE JOINT AND MASTIC AND FABRIC WRAP ON THE STRUCTURE EXTERIOR.
7. INTERIOR JOINTS SHALL BE FILLED AND SEALED TO PREVENT WATER FLOW IN JOINT BEHIND STOP LOG CHANNEL USING EITHER CONCRETE GROUT OR MASTIC.
8. ALL REINFORCEMENT FOR WATER CONTROL STRUCTURE SHALL BE ONE LAYER OF #4 REBAR @ 12" SPACING, CENTERED IN WALL, TWO #4 HOOP BARS ARE TO BE USED AT EACH OPENING.
9. PLACE BASE OF STRUCTURE ON FIRM UNDISTURBED EARTH FOUNDATION APPROVED BY ENGINEER.
10. GROUTED CONNECTIONS ARE REQUIRED FOR PIPE CONNECTIONS TO THE DRAWDOWN CONTROL STRUCTURE. CONNECTIONS SHALL BE WATER-TIGHT.
11. MANHOLE STEPS ARE TO BE INSTALLED FOR MAINTENANCE ACCESS TO THE STOP LOGS. STEPS ARE TO BE PER SUDAS SECTION 6010-2-2.13.
12. ENSURE THAT ALL JOINTS ARE WATER-TIGHT AND PROPERLY SEALED

© Bolton & Menk, Inc. 2025, All Rights Reserved
h:\IDALS\0713078 6\CAD\C3D\130786C101.dwg 10/20/2025 11:38:42 AM

BOLTON & MENK
1519 BALTIMORE DRIVE
AMES, IOWA 50010
Phone: (515) 233-6100
Email: Ames@bolton-menk.com
www.bolton-menk.com

DESIGNED	BCS
DRAWN	BCS
CHECKED	JPR
CLIENT PROJ. NO.	0T7.130786

REV	DESCRIPTION	DATE
1.0	BID PLANS	06-27-2025
1.1	ADDENDUM PLANS	10-16-2025

IOWA DEPARTMENT OF AGRICULTURE AND LAND STEWARDSHIP

IDALS PROJECT NO. FLO971523B

WATER CONTROL STRUCTURE DETAIL

SHEET B.04

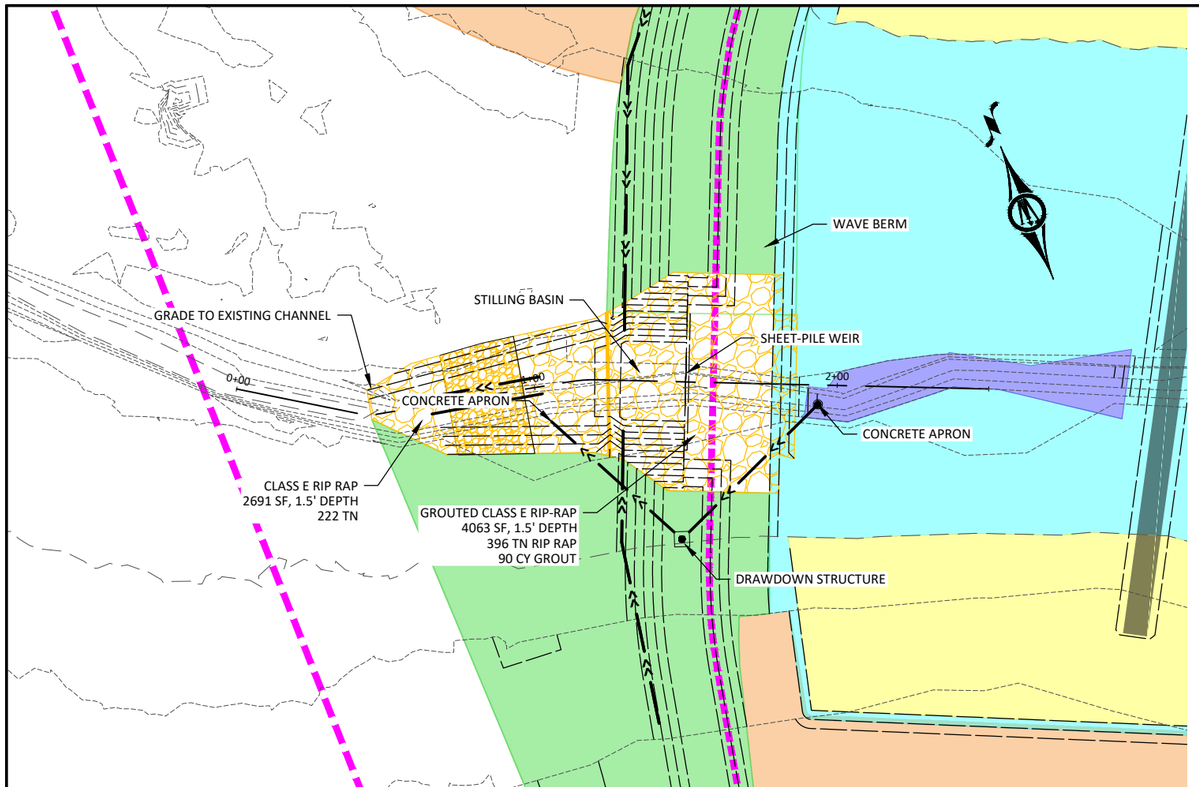

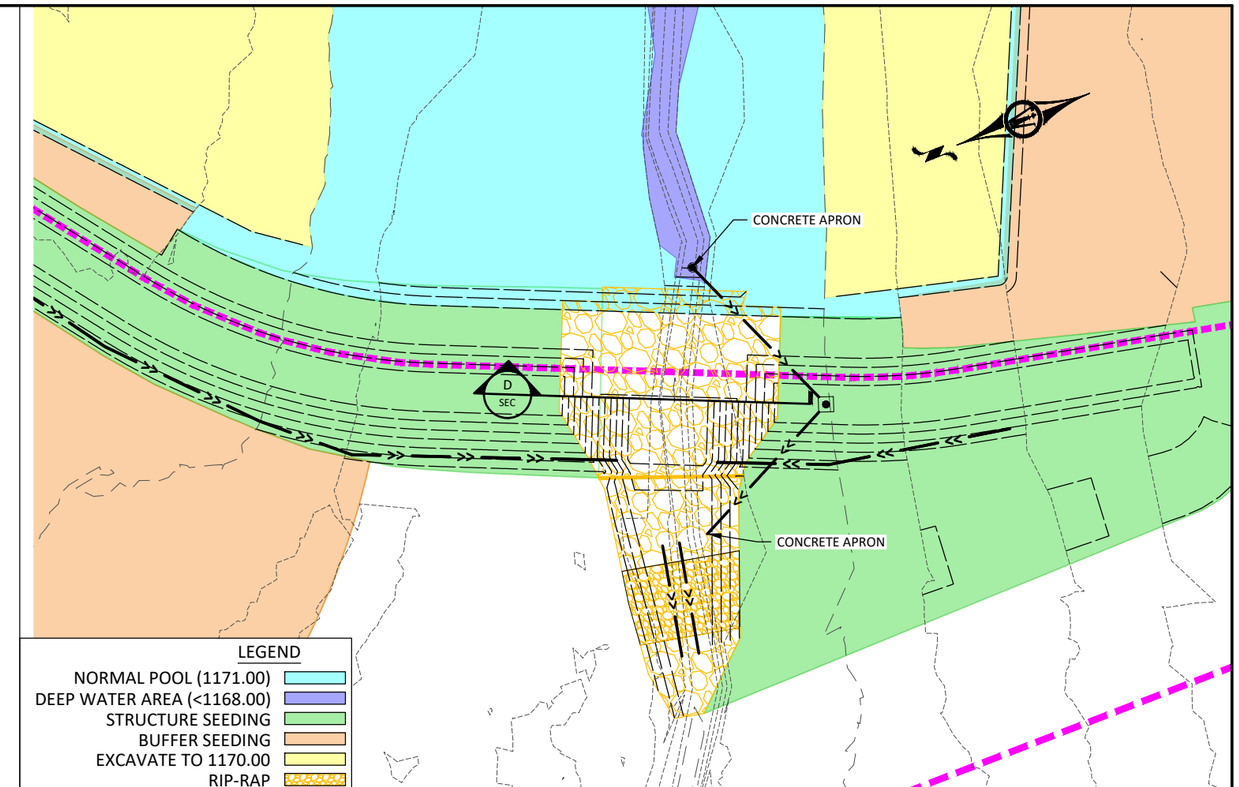

STILLING BASIN PROFILE

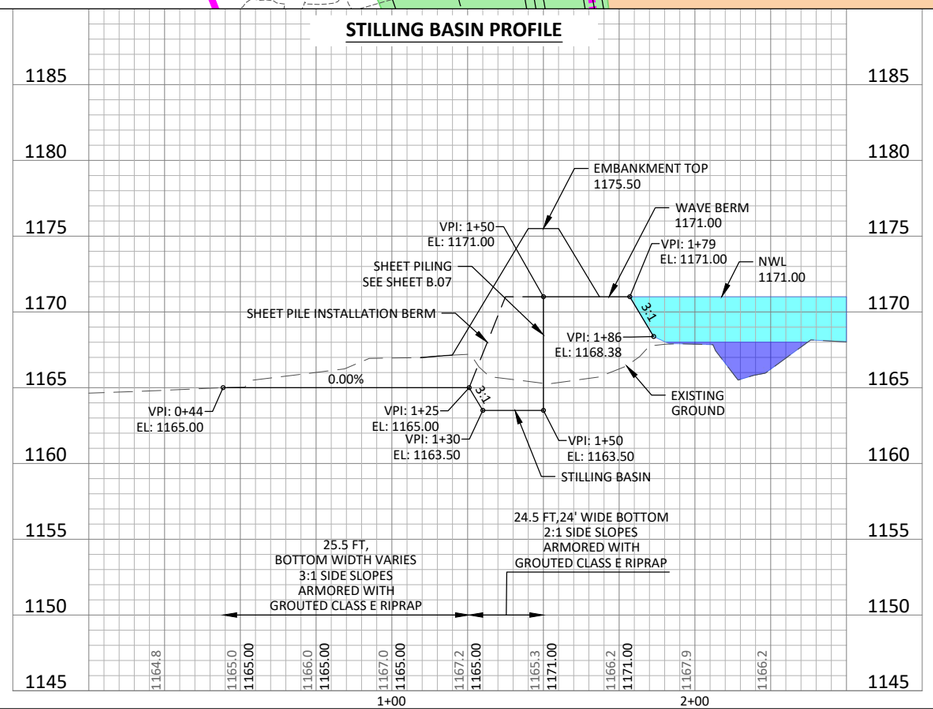

SPILLWAY CROSS SECTION D

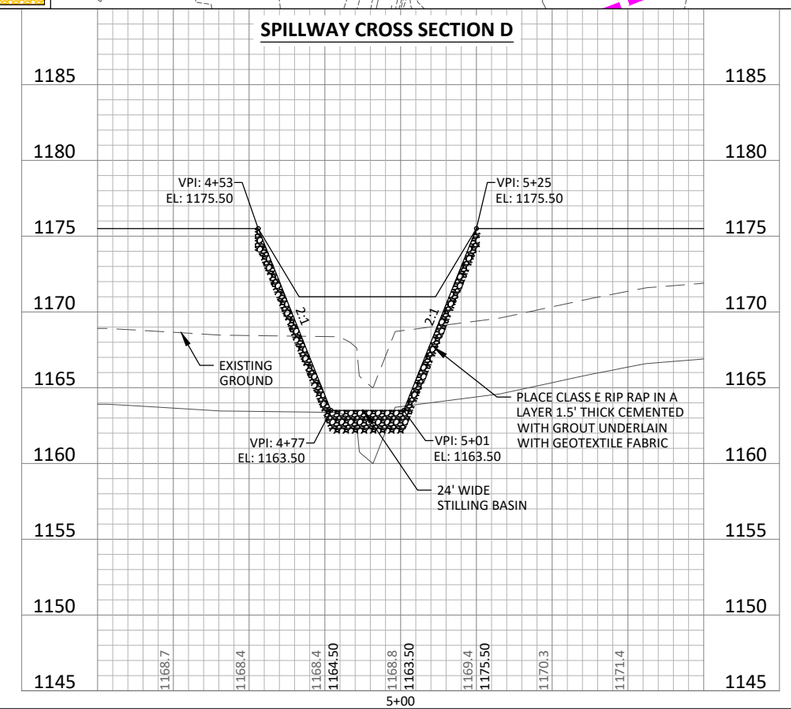

HORZ. 0 25 50 SCALE FEET

VERT. 0 5 10 SCALE FEET

BOLTON & MENK

1519 BALTIMORE DRIVE
AMES, IOWA 50010
Phone: (515) 233-6100
Email: Ames@bolton-menk.com
www.bolton-menk.com

DESIGNED BCS	REV	DESCRIPTION	DATE
DRAWN BCS	1.0	BID PLANS	06-27-2025
CHECKED JPR	1.1	ADDENDUM PLANS	10-16-2025
CLIENT PROJ. NO. 0T7.130786			

IOWA DEPARTMENT OF AGRICULTURE AND LAND STEWARDSHIP

IDALS PROJECT NO. FLO971523B

STILLING BASIN DETAIL

SHEET B.05

©Bolton & Menk, Inc. 2025, All Rights Reserved
h:\IDALS\0T7130786\CAD\C3D\130786C102.dwg 10/20/2025 11:39:02 AM

DESIGN SHEET PILING AREA

SHEET PILING REQUIREMENTS

MINIMUM SECTION MODULUS: 5.01 CUBIC INCHES PER FOOT OF WALL.
MINIMUM GRADE OF STEEL: 25 KSI.
MINIMUM MOMENT OF INERTIA: 10.39 INCHES ^ 4 PER FOOT OF WALL.
ALL SHEETING SHALL MEET ASTM A-328, A-572 GR50 OR A-690.

APPROVED PRODUCTS

SHORELINE STEEL LZ-3, LZ-250
NUCOR SKYLINE SKS 11
JD FIELDS L60, L65
GERDAU AMERISTEEL PZC 13

OTHER SHEETING MAY BE ALLOWED WITH PRIOR APPROVAL OF ENGINEER. ALL MATERIALS ARE ESTIMATED AND FURTHER SIZING WILL NEED TO BE DONE.

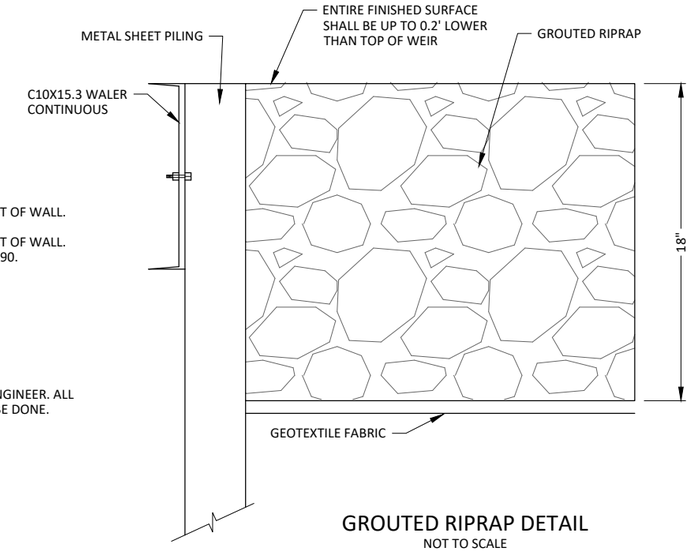

GROUTED RIPRAP DETAIL
NOT TO SCALE

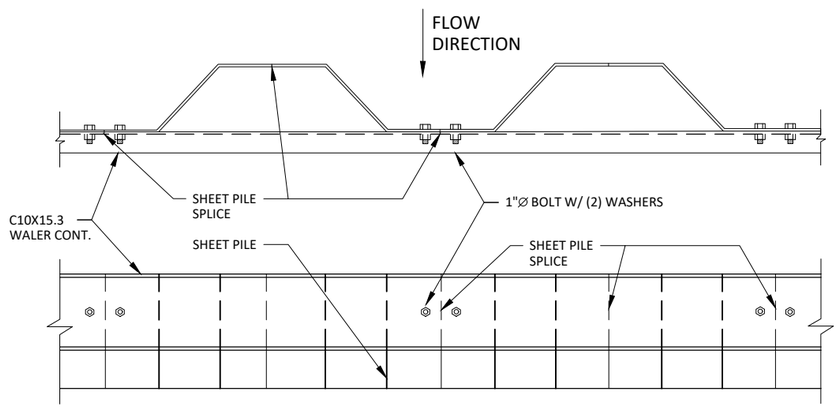

WALER BOLT PLACEMENT
NOT TO SCALE

NOTES:

1. ALL BOLTS WILL BE 1" DIA. WITH 2 WASHERS. BOLT SHALL BE EXTENDED AT A MINIMUM OF $\frac{3}{8}$" BEYOND THE NUT.
2. ALL HOLES SHALL BE DRILLED $\frac{1}{16}$" DIA. LARGER THAN THE BOLT.
3. THE WALER SHALL BE PLACED ON THE DOWNSTREAM SIDE OF THE WEIR.
4. ANY HOLES LEFT IN SHEET PILE (LIFTING HOLES ETC.) SHALL BE WELDED CLOSED.
5. AFTER SHEETING AND WALER INSTALLATION ALL SHEETING ON THE WEIR IS TO BE CUT TO CONFORM WITH 3:1 SLOPE AND THE DESIGN ELEVATIONS.
6. STRUCTURAL STEEL SHALL BE FABRICATED AND ERECTED IN ACCORDING WITH THE LATEST SPECIFICATION OF AISC. FABRICATOR SHALL SUBMIT SHOP DRAWINGS SHOWING THAT PLANNED STEEL WILL COMPLETELY COVER INTENDED WALL AREA. FABRICATE AFTER ENGINEERS REVIEW.
7. DEFLECTIONS SHALL BE MADE IN FABRICATED PIECES AND STILL CONFORM TO THE DIMENSIONS GIVEN.
8. IT IS THE CONTRACTOR'S RESPONSIBILITY TO DETERMINE ALLOWABLE CONSTRUCTION LIVE LOADS.
9. PROVIDE ALL NECESSARY TEMPORARY BRACING, SHORING, GUYING OR OTHER MEANS TO AVOID EXCESSIVE STRESSES AND TO HOLD STRUCTURAL ELEMENTS IN PLACE DURING CONSTRUCTION.

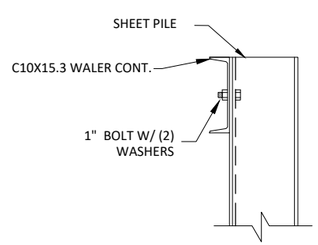

NOTE: 1 BOLT TO BE PLACED ON EACH SIDE OF SPLICE

BOLT DETAIL
NOT TO SCALE

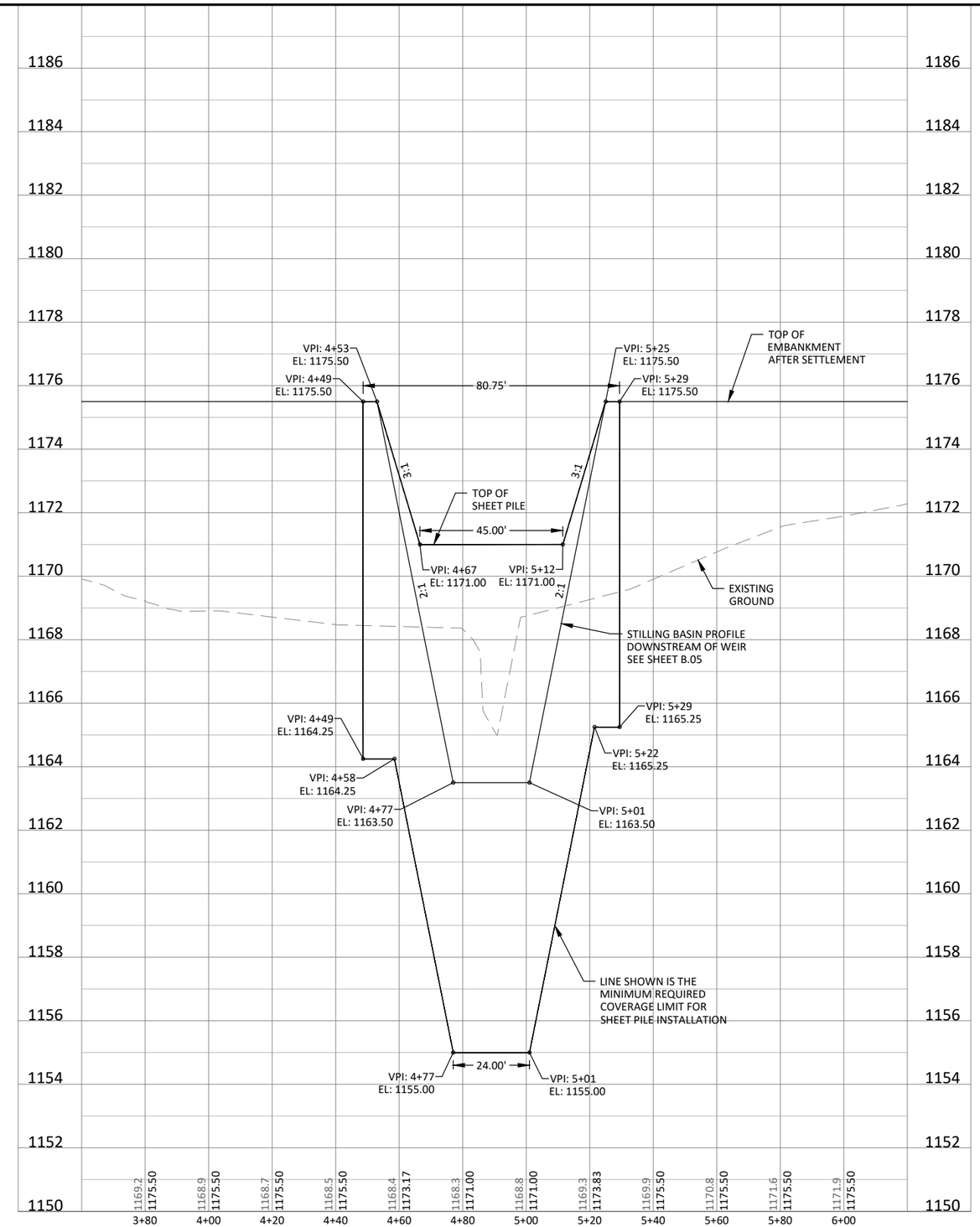

HORZ. 0 20 40 SCALE FEET

BOLTON & MENK
1519 BALTIMORE DRIVE
AMES, IOWA 50010
Phone: (515) 233-6100
Email: Ames@bolton-menk.com
www.bolton-menk.com

DESIGNED	BCS
DRAWN	BCS
CHECKED	JPR
CLIENT PROJ. NO.	0T7.130786

REV	DESCRIPTION	DATE
1.0	BID PLANS	06-27-2025
1.1	ADDENDUM PLANS	10-16-2025

IOWA DEPARTMENT OF AGRICULTURE AND LAND STEWARDSHIP
IDALS PROJECT NO. FLO971523B
SHEET PILE DETAIL

SHEET B.06

©Bolton & Menk, Inc. 2025, All Rights Reserved
h:\DALS\0T7130786\CAD\C3D\130786C103.dwg 10/20/2025 11:39:07 AM

Bid Item	Sub-Item	Description	Specifications No.	Specifications Page	Plan No.	Estimated Quantities Quantity	Estimated Quantities Unit
1	-	Site Stripping & Preparation	IA CS-001		A.02	1	LS
2	-	Structure & Channel Seeding	IA CS-006		A.02	1.9	AC
3	-	Buffer Seeding	IA CS-006		A.02	11.4	AC
4	-	Mobilization and Demobilization	IA CS-008		A.02	1	LS
5	-	Drain tile Investigation and Removal	IA CS-009		A.02	8	HR.
6	-	Steel Sheet Piling	IA CS-013		B.06	1063	SF
7	-	Excavation (General)	IA CS-021		A.02	18335	CY
8	-	Earthfill (General)	IA CS-023		D.02-D.03, M.01, M.03	826	CY
9	-	Earthfill (General Dam)	IA CS-023		D.01	2641	CY
10	-	Earthfill (Dam Core)	IA CS-023		D.01	950	CY
11	-	Drainfill, Fine	IA CS-024		D.01	28.5	CY
12	-	Topsoil Strip, Stockpile, Salvage	IA CS-026		A.02	4460	CY
13	-	Toe Drain - 6" Diameter	IA CS-046		D.01	358	LF
14	-	Reinforced Concrete Pipe - 12"	IA CS-031		M.04	145	LF
15	-	Dual-Wall HDPE Pipe					
	A.	12" Diameter	IA CS-046		M.01-M.02	139	LF
	C.	24" Diameter	IA CS-046		M.01, M.03	1343	LF
16	-	SW-402 Water Control Structure	IA CS-031		B.04, M.04	1	EA
17	-	12" Apron, Footing, Bar Guard	IA CS-031		M.04	1	EA
18	-	10" x 20' CMP Tile Outlet	IA CS-051		A.02	1	EA
19	-	Riprap (Class E)	IA CS-061		B.05, M.01, M.03	735	TN
20	-	Erosion Stone	IA CS-061		A.02	105	TN
21	-	Grout for Rip Rap	IA CS-062		B.05	90	CY
22	-	Anti-Seep Collars	IA CS-051		B.03, M.04	3	EA
23	-	Culvert Crossing	IA CS-051		M.04	1	EA
24	-	Outlet Riser Structure	IA CS-046		M.04	1	EA
25	-	24" Metal Pipe Apron	IA CS-046		M.01, M.03	2	EA
26	-	8" Plastic Tile	IA CS-046		A.02	165	LF
27	-	Macadam Stone	IA CS-061		M.01, M.02, M.04	60	TN
28	-	Crop Damage	IA CS-001		A.02	0	AC

©Bolton & Menk, Inc. 2025, All Rights Reserved
h:\IDALS\0T130786\CAD\C3D\130786G002.dwg 10/20/2025 11:39:16 AM

BOLTON & MENK
1519 BALTIMORE DRIVE
AMES, IOWA 50010
Phone: (515) 233-6100
Email: Ames@bolton-menk.com
www.bolton-menk.com

DESIGNED BCS
DRAWN BCS
CHECKED JPR
CLIENT PROJ. NO. 0T7.130786

REV	DESCRIPTION	DATE
1.0	BID PLANS	06-27-2025
1.1	ADDENDUM PLANS	10-16-2025

IOWA DEPARTMENT OF AGRICULTURE AND LAND STEWARDSHIP
IDALS PROJECT NO. FLO971523B
ESTIMATED QUANTITIES

SHEET C.01

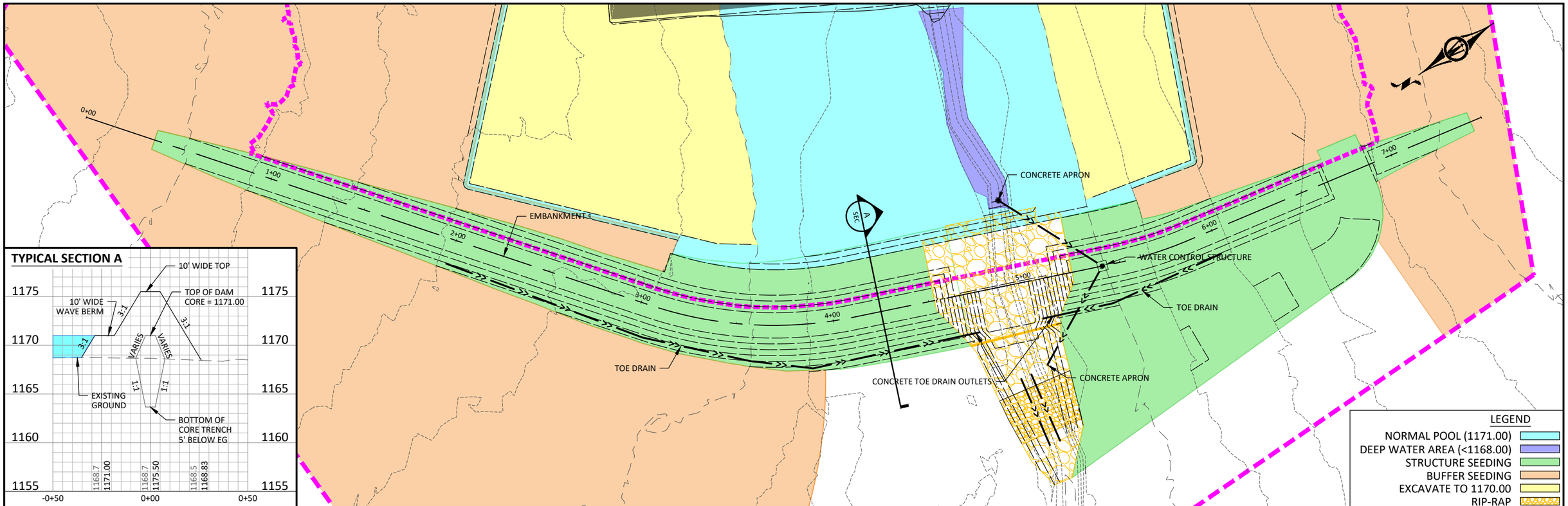

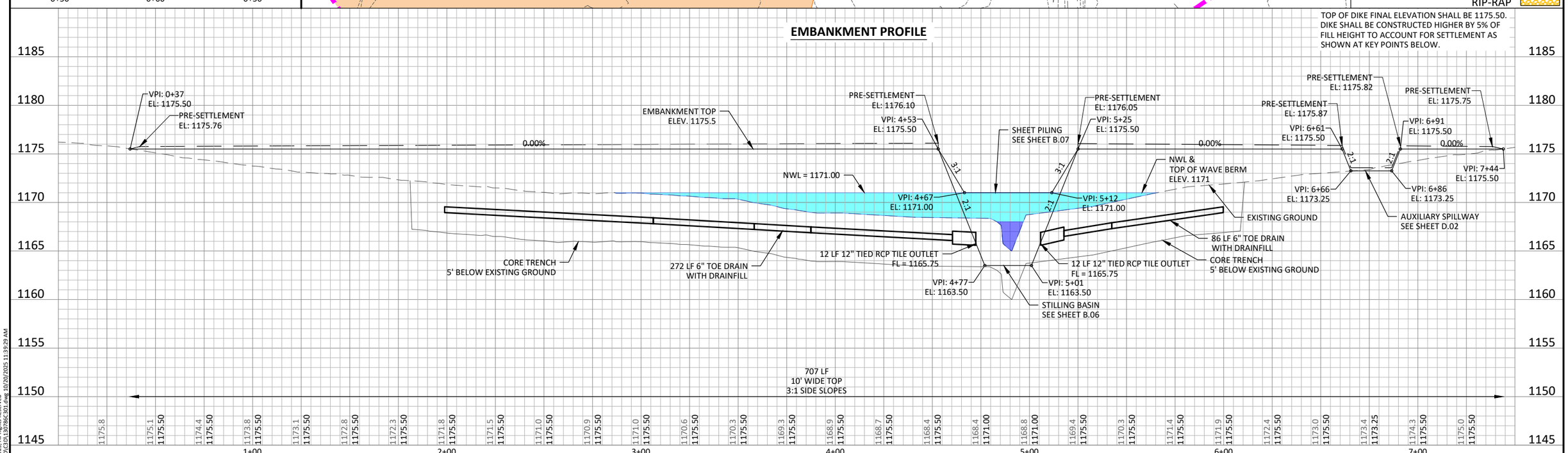

HORZ. 0 25 50 SCALE FEET

VERT. 0 5 10 SCALE FEET

BOLTON & MENK

1519 BALTIMORE DRIVE
AMES, IOWA 50010
Phone: (515) 233-6100
Email: Ames@bolton-menk.com
www.bolton-menk.com

DESIGNED	BCS
DRAWN	BCS
CHECKED	JPR
CLIENT PROJ. NO.	0T7.130786

REV	DESCRIPTION	DATE
1.0	BID PLANS	06-27-2025
1.1	ADDENDUM PLANS	10-16-2025

IOWA DEPARTMENT OF AGRICULTURE AND LAND STEWARDSHIP

IDALS PROJECT NO. FLO971523B

PLAN & PROFILE - EMBANKMENT

SHEET D.01

©Bolton & Menk, Inc. 2025, All Rights Reserved
h:\IDALS\0T7130786\CAD\C3D\130786C301.dwg 10/20/2025 11:39:29 AM

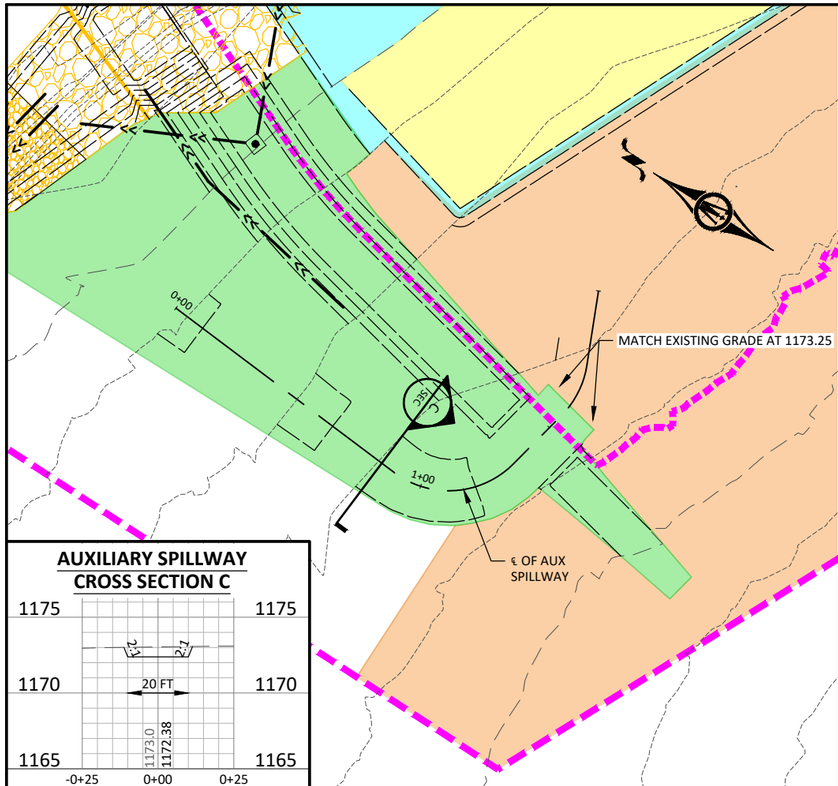

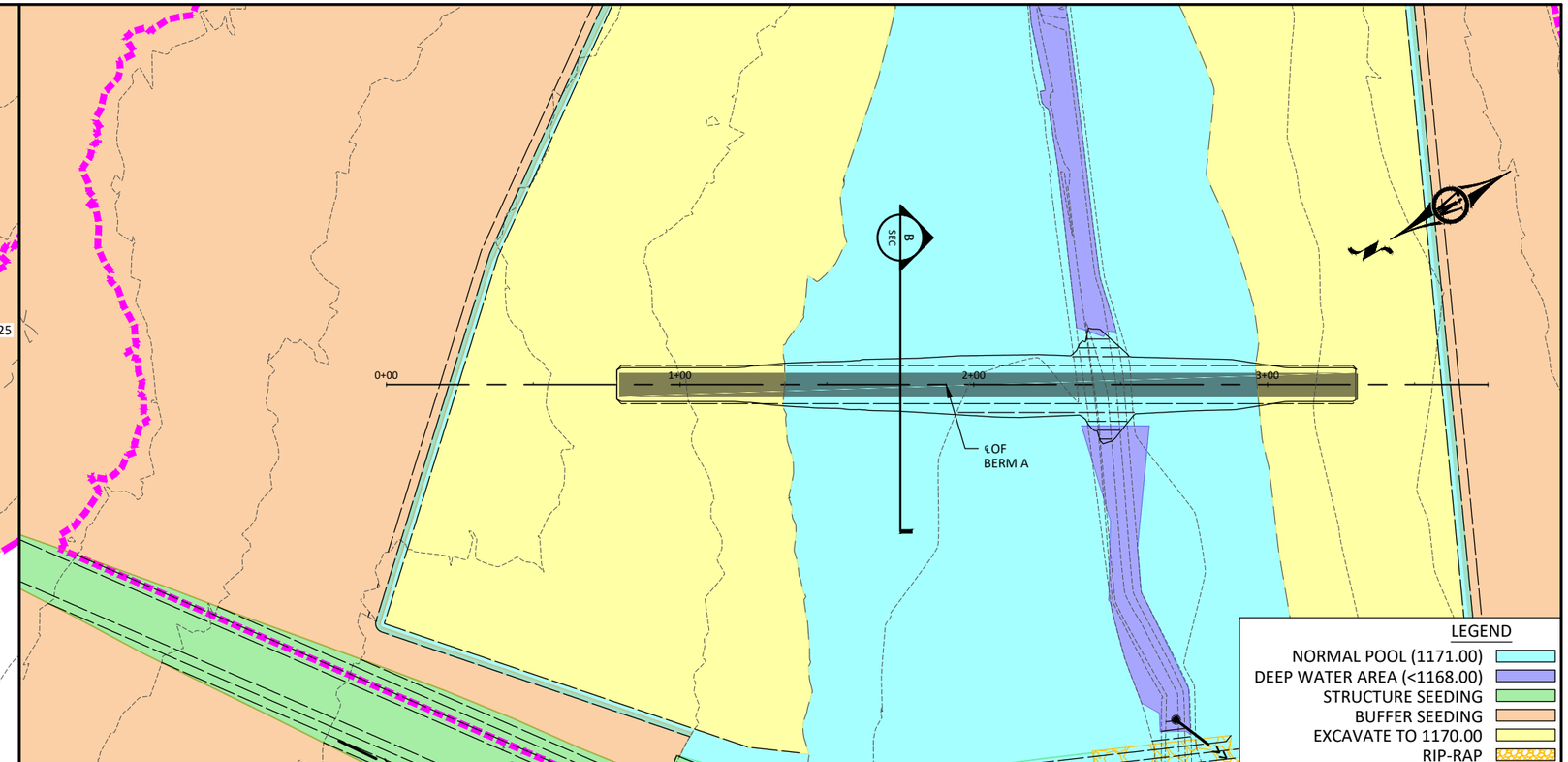

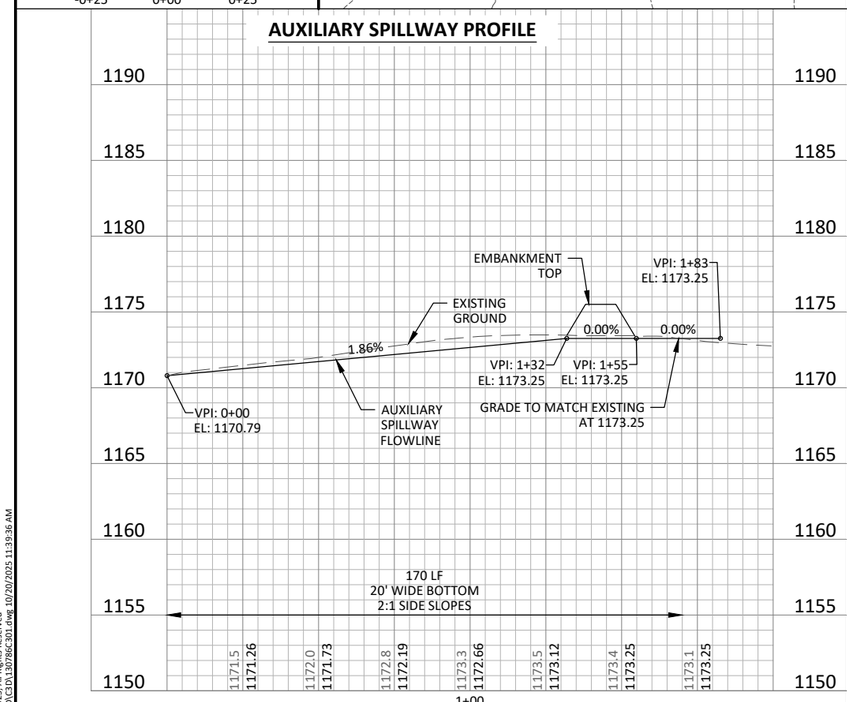

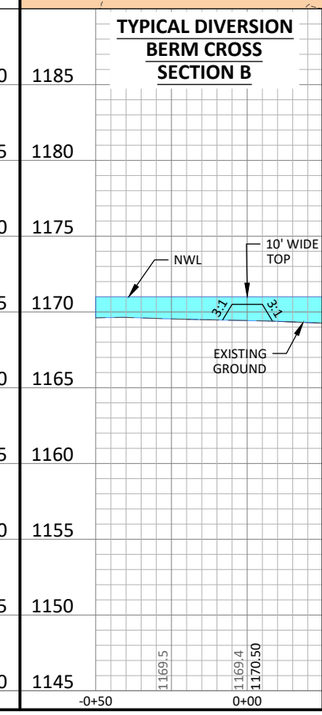

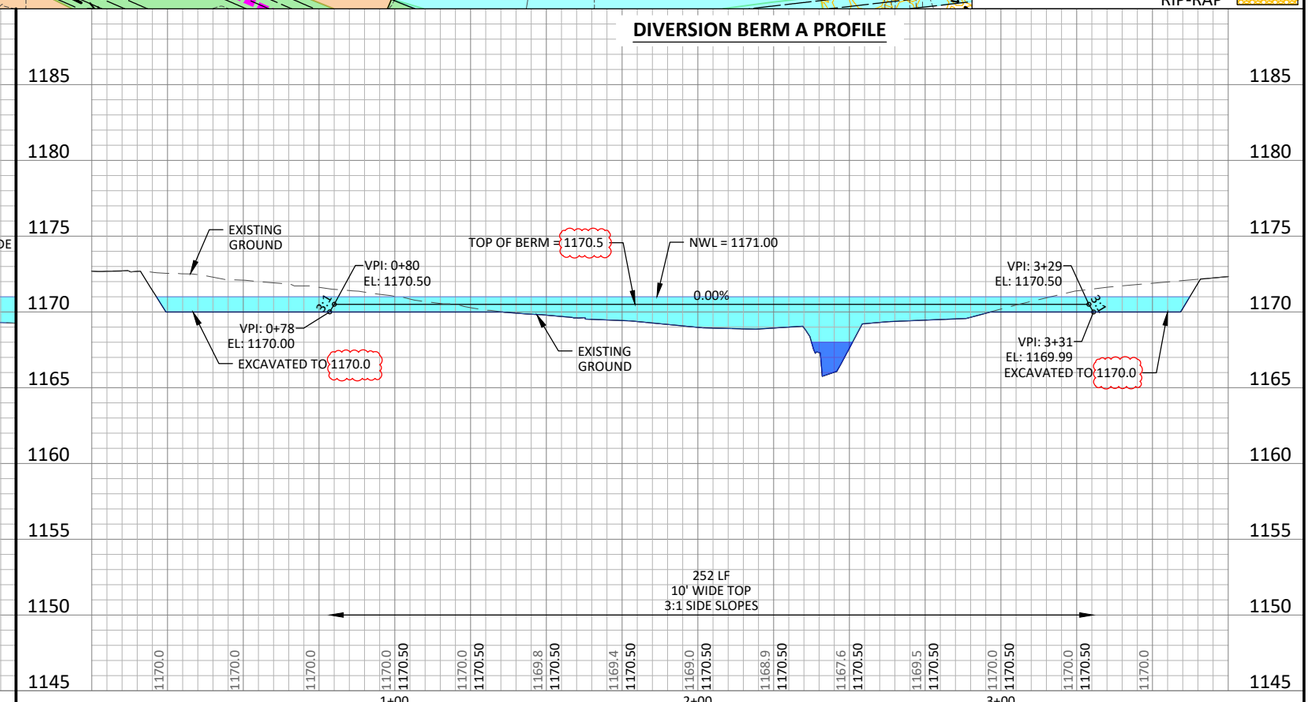

HORZ. 0 25 50 SCALE FEET

VERT. 0 5 10 SCALE FEET

BOLTON & MENK

1519 BALTIMORE DRIVE
AMES, IOWA 50010
Phone: (515) 233-6100
Email: Ames@bolton-menk.com
www.bolton-menk.com

DESIGNED	BCS
DRAWN	BCS
CHECKED	JPR
CLIENT PROJ. NO.	0T7.130786

REV	DESCRIPTION	DATE
1.0	BID PLANS	06-27-2025
1.1	ADDENDUM PLANS	10-16-2025

IOWA DEPARTMENT OF AGRICULTURE AND LAND STEWARDSHIP

IDALS PROJECT NO. FLO971523B

PLAN & PROFILE - AUXILIARY SPILLWAY & BERM A

SHEET D.02

©Bolton & Menk, Inc. 2025, All Rights Reserved
h:\IDALS\0t7130786\CAD\C3D\130786C301.dwg 10/20/2025 11:39:36 AM

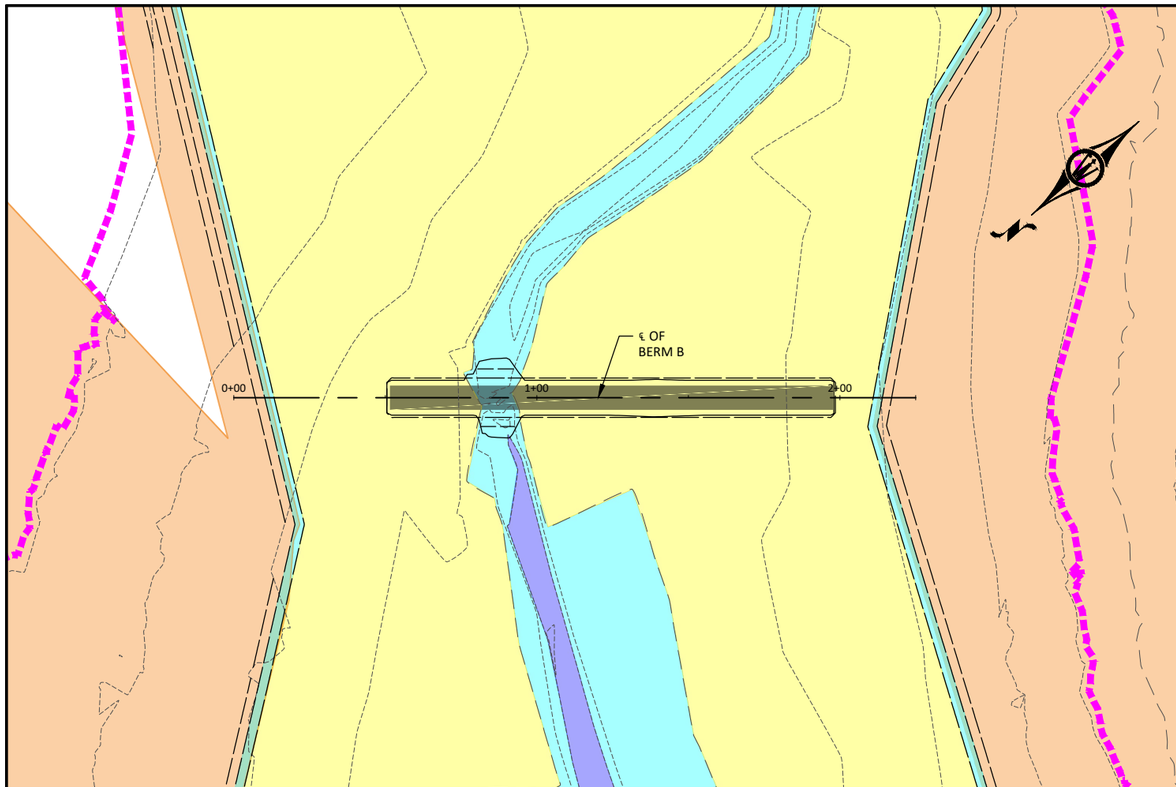

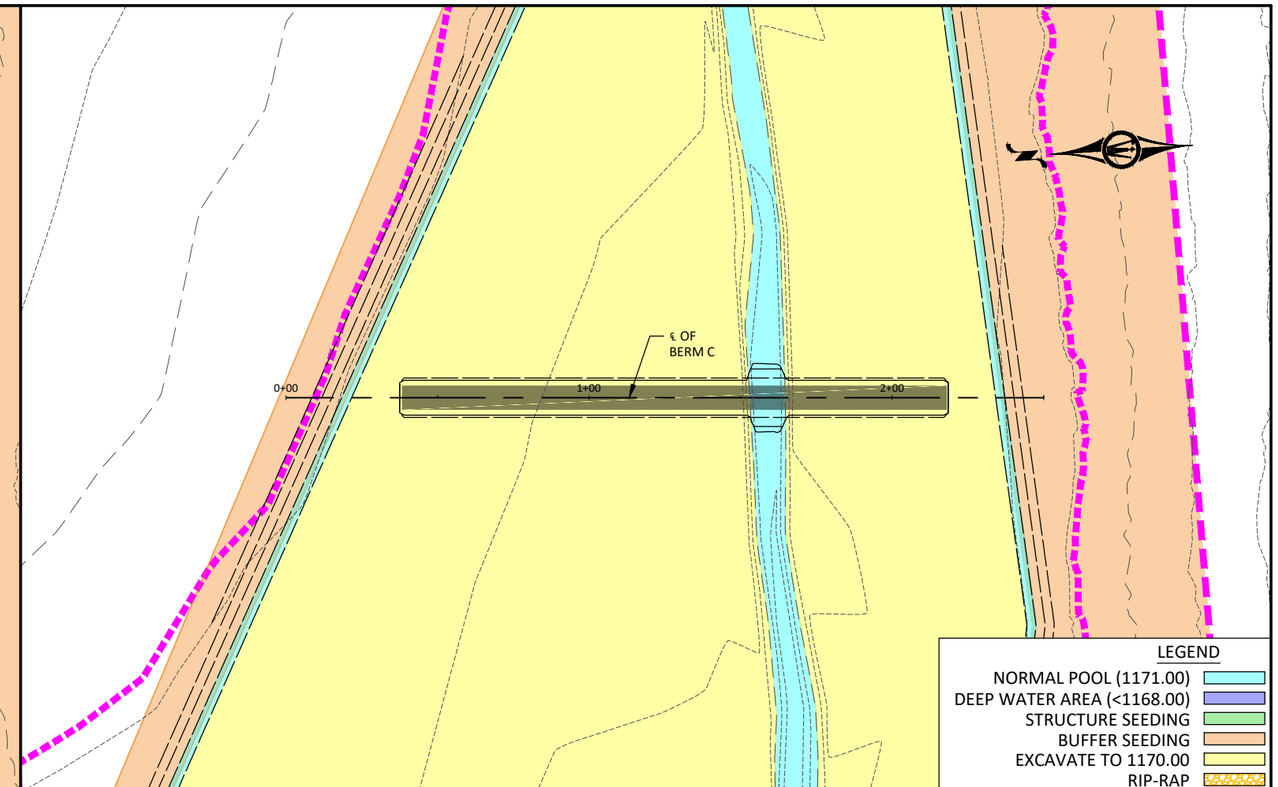

DIVERSION BERM B PROFILE

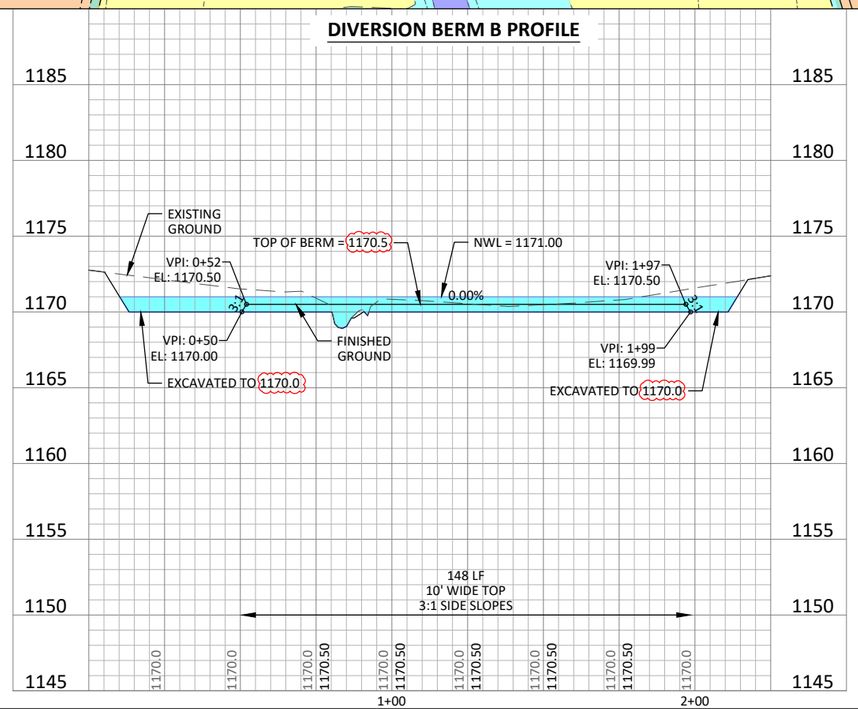

DIVERSION BERM C PROFILE

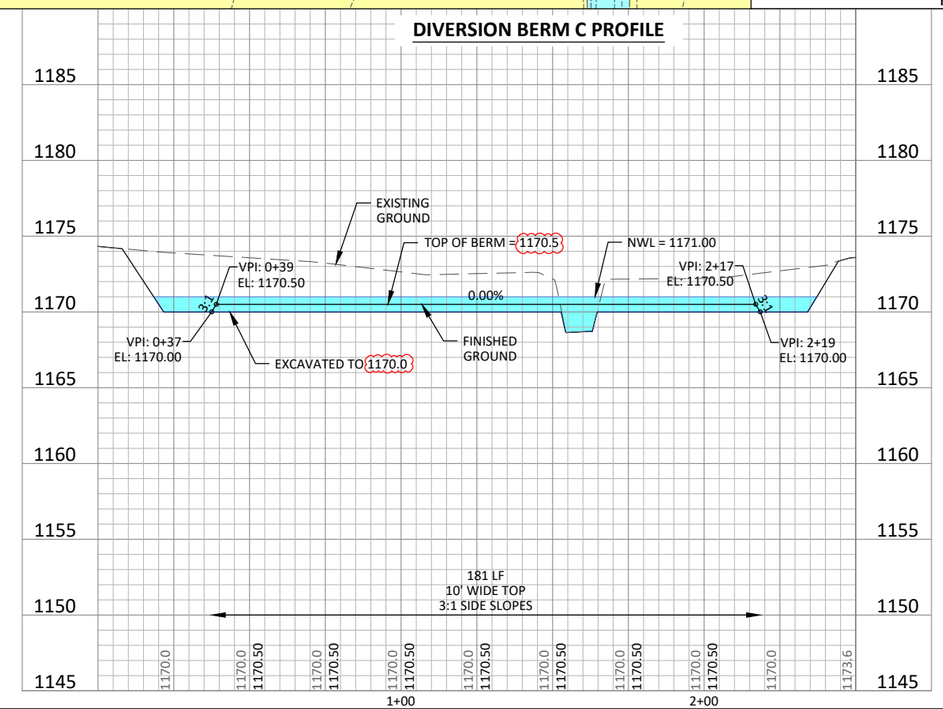

HORZ. 0 25 50 SCALE FEET

VERT. 0 5 10 SCALE FEET

BOLTON & MENK
1519 BALTIMORE DRIVE
AMES, IOWA 50010
Phone: (515) 233-6100
Email: Ames@bolton-menk.com
www.bolton-menk.com

DESIGNED	BCS
DRAWN	BCS
CHECKED	JPR
CLIENT PROJ. NO.	0T7.130786

REV	DESCRIPTION	DATE
1.0	BID PLANS	06-27-2025
1.1	ADDENDUM PLANS	10-16-2025

IOWA DEPARTMENT OF AGRICULTURE AND LAND STEWARDSHIP

IDALS PROJECT NO. FLO971523B

PLAN & PROFILE - BERM B & BERM C

SHEET D.03

©Bolton & Menk, Inc. 2025, All Rights Reserved
h:\IDALS\0T7130786\CAD\C3D\130786C301.dwg 10/20/2025 11:39:41 AM

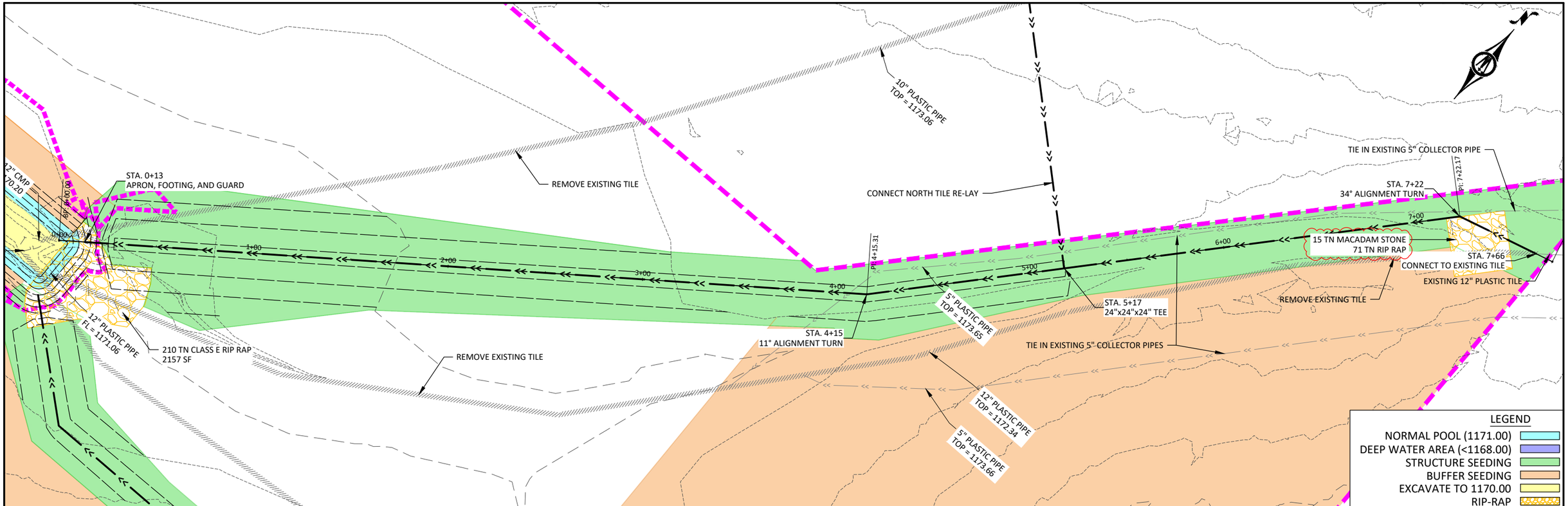

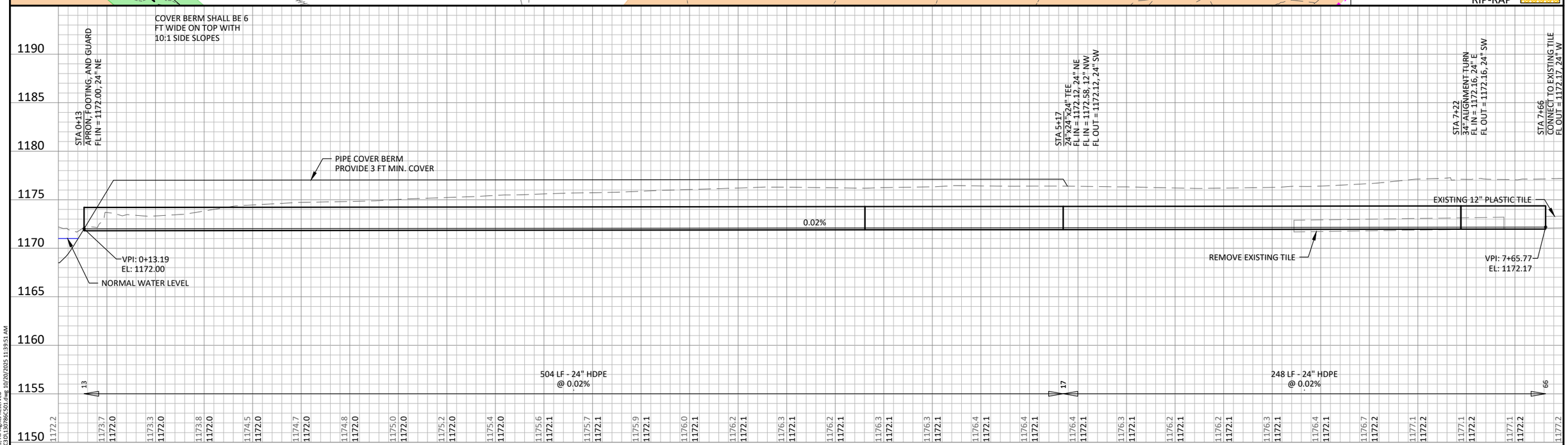

HORZ. 0 25 50 SCALE FEET

VERT. 0 5 10 SCALE FEET

BOLTON & MENK

1519 BALTIMORE DRIVE
AMES, IOWA 50010
Phone: (515) 233-6100
Email: Ames@bolton-menk.com
www.bolton-menk.com

DESIGNED	BCS
DRAWN	BCS
CHECKED	JPR
CLIENT PROJ. NO.	0T7.130786

REV	DESCRIPTION	DATE
1.0	BID PLANS	06-27-2025
1.1	ADDENDUM PLANS	10-16-2025

IOWA DEPARTMENT OF AGRICULTURE AND LAND STEWARDSHIP

IDALS PROJECT NO. FLO971523B

PLAN & PROFILE - CENTER TILE RE-LAY

SHEET M.01

©Bolton & Menk, Inc. 2025, All Rights Reserved
h:\IDALS\0T7130786\CAD\C3D\130786C501.dwg 10/20/2025 11:39:51 AM

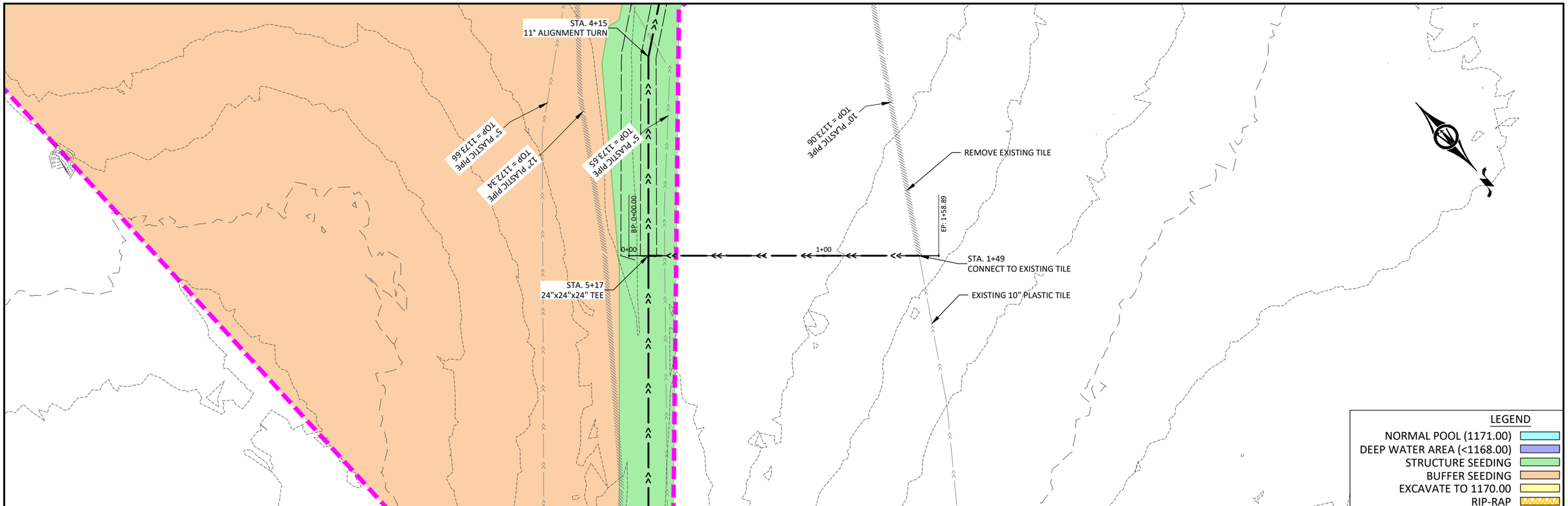

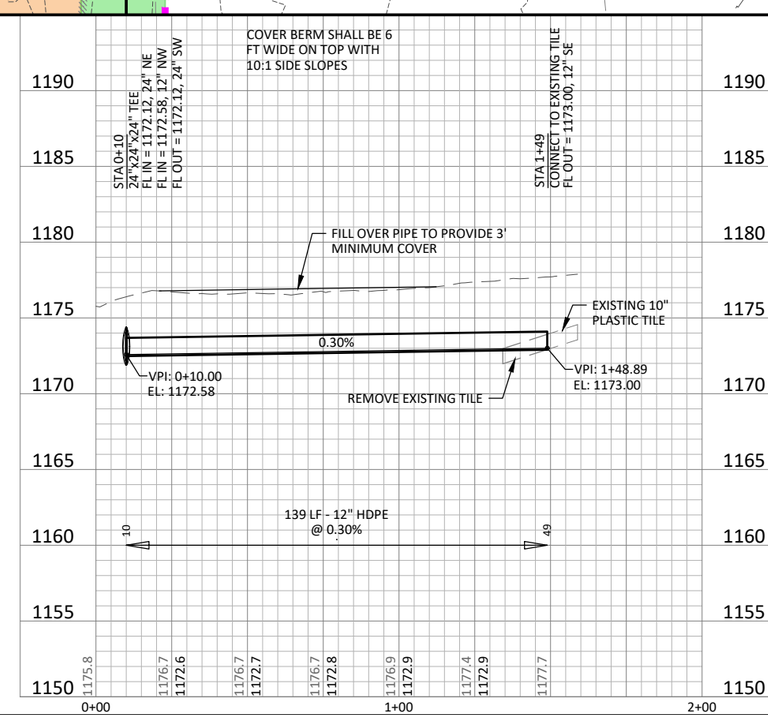

HORZ. 0 25 50 SCALE FEET

VERT. 0 5 10 SCALE FEET

BOLTON & MENK

1519 BALTIMORE DRIVE
AMES, IOWA 50010
Phone: (515) 233-6100
Email: Ames@bolton-menk.com
www.bolton-menk.com

DESIGNED	BCS
DRAWN	BCS
CHECKED	JPR
CLIENT PROJ. NO.	017.130786

REV	DESCRIPTION	DATE
1.0	BID PLANS	06-27-2025
1.1	ADDENDUM PLANS	10-16-2025

IOWA DEPARTMENT OF AGRICULTURE AND LAND STEWARDSHIP

IDALS PROJECT NO. FLO971523B

PLAN & PROFILE - NORTH TILE RE-LAY

SHEET M.02

©Bolton & Menk, Inc. 2025, All Rights Reserved
h:\IDALS\017130786\CAD\C3D\130786C501.dwg 10/20/2025 11:39:53 AM

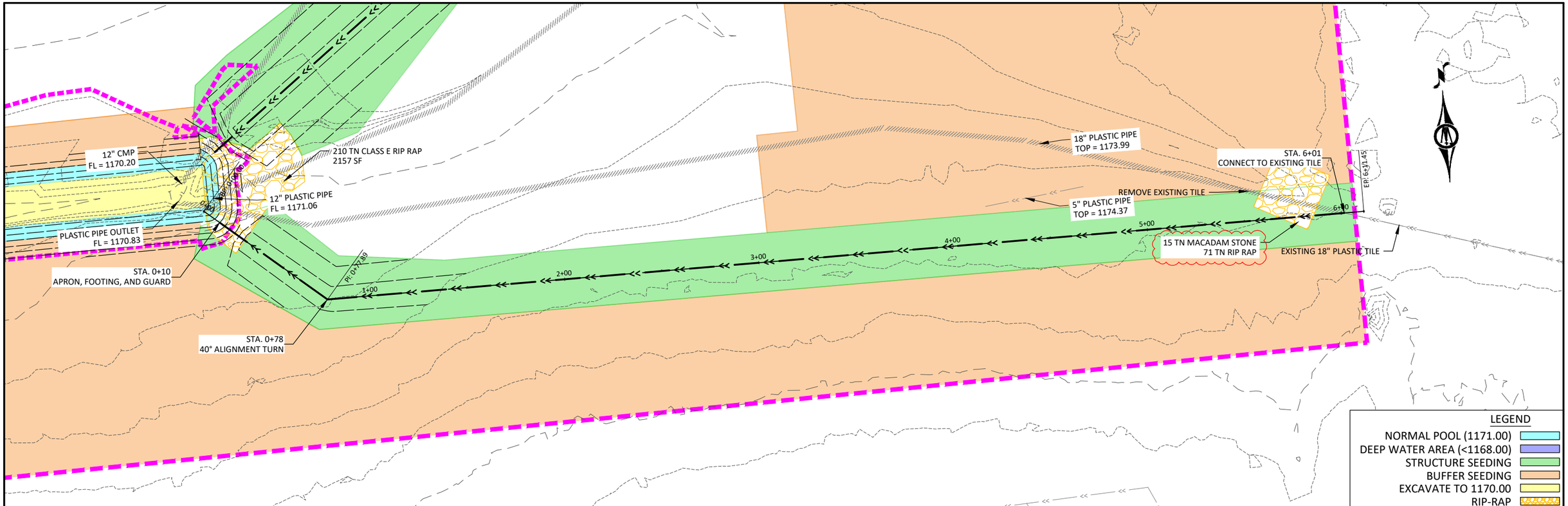

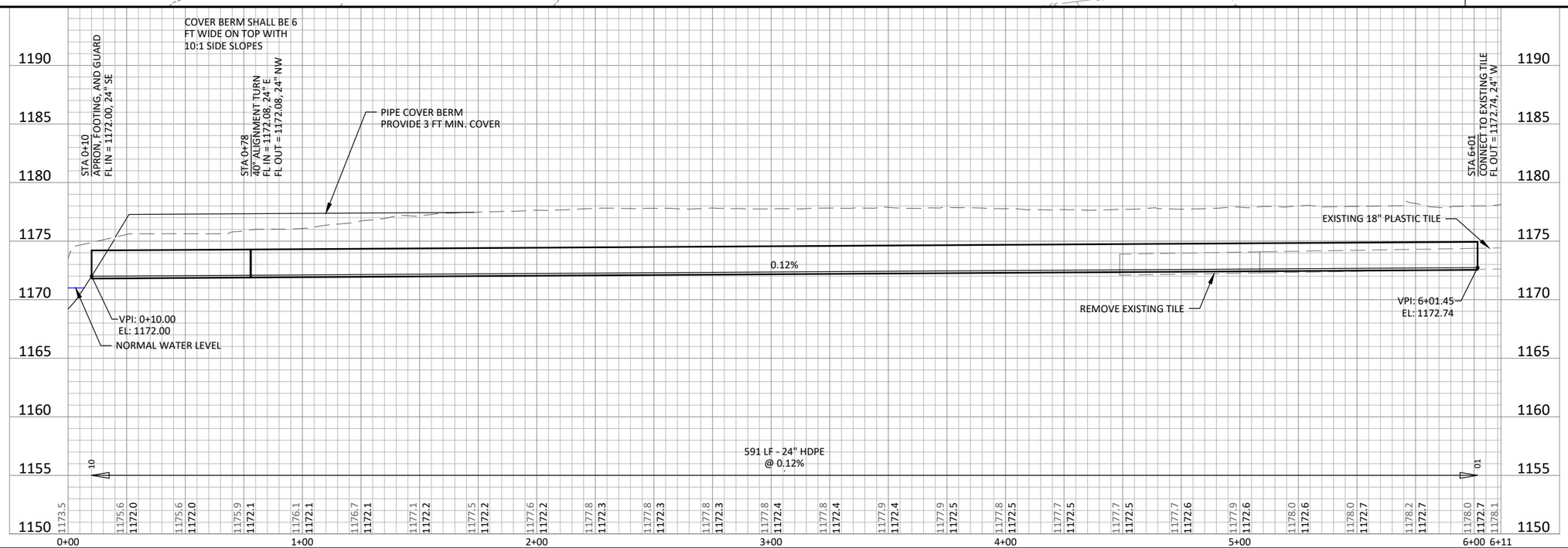

HORZ. 0 25 50 SCALE FEET

VERT. 0 5 10 SCALE FEET

BOLTON & MENK

1519 BALTIMORE DRIVE
AMES, IOWA 50010
Phone: (515) 233-6100
Email: Ames@bolton-menk.com
www.bolton-menk.com

DESIGNED	BCS
DRAWN	BCS
CHECKED	JPR
CLIENT PROJ. NO.	0T7.130786

REV	DESCRIPTION	DATE
1.0	BID PLANS	06-27-2025
1.1	ADDENDUM PLANS	10-16-2025

IOWA DEPARTMENT OF AGRICULTURE AND LAND STEWARDSHIP

IDALS PROJECT NO. FLO971523B

PLAN & PROFILE - SOUTH TILE RE-LAY

SHEET M.03

©Bolton & Menk, Inc. 2025, All Rights Reserved
h:\IDALS\0T7130786\CAD\C3D\130786C501.dwg 10/20/2025 11:39:59 AM

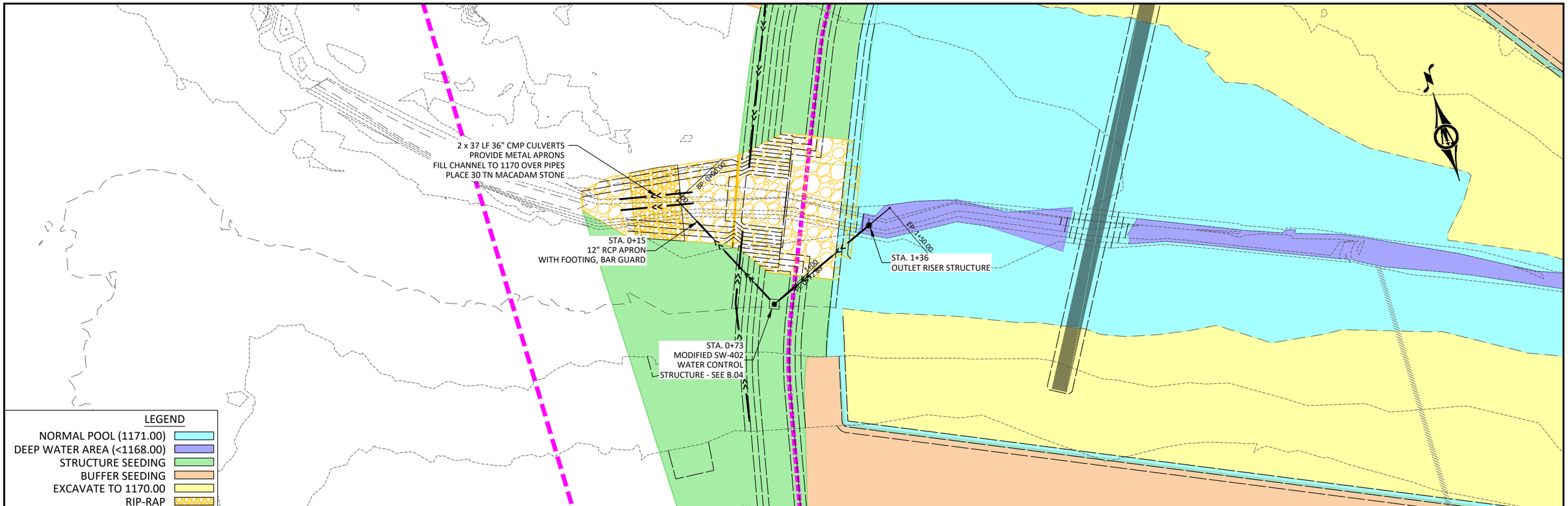

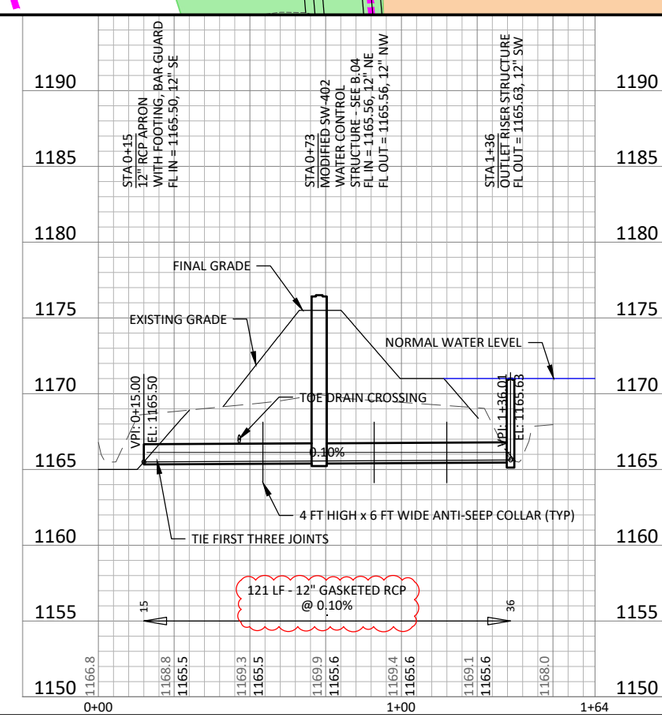

HORZ. 0 25 50 SCALE FEET

VERT. 0 5 10 SCALE FEET

BOLTON & MENK
1519 BALTIMORE DRIVE
AMES, IOWA 50010
Phone: (515) 233-6100
Email: Ames@bolton-menk.com
www.bolton-menk.com

DESIGNED	BCS
DRAWN	BCS
CHECKED	JPR
CLIENT PROJ. NO.	0T7.130786

REV	DESCRIPTION	DATE
1.0	BID PLANS	06-27-2025
1.1	ADDENDUM PLANS	10-16-2025

IOWA DEPARTMENT OF AGRICULTURE AND LAND STEWARDSHIP

IDALS PROJECT NO. FLO971523B

PLAN & PROFILE - DRAWDOWN PIPE

SHEET M.04

©Bolton & Menk, Inc. 2025, All Rights Reserved
h:\IDALS\0t7130786\CAD\C3D\130786C501.dwg 10/20/2025 11:40:04 AM